PHILIPPINE
PORTS
AUTHORITY

PORT MANAGEMENT OFFICE
PALAWAN

CONSTRUCTION DRAWINGS

BUSUANGA PORT DEVELOPMENT

MUNICIPALITY OF BUSUANGA, PALAWAN

INDEX TO SHEETS

	CIVIL WORKS
C-1	LOCATION MAP VICINITY MAP EXISTING PORT LAYOUT PLAN
C-2	PROPOSED PORT DEVELOPMENT PLAN GENERAL NOTES
C-3	CAUSEWAY PLAN CAUSEWAY ELEVATION
C-4	TYP. SLOPE PROTECTION DETAIL RC CURB BLOCK DETAIL, RETAINING CONCRETE BLOCK DETAIL MOORING CLEAT DETAIL
C-5	SECTION THRU "B" RCCP CROWN DETAIL STAIRLANDING PLAN & SECTION KEYED PAVEMENT DETAIL
C-6	PROPOSED FOUNDATION PLAN PROPOSED SECTION "X" PROPOSED SECTION "Y"
C-7	G1 DETAIL; TB DETAIL; RC CURB B1 DETAIL; B2 DETAIL C1/FS DETAIL; C1 DETAIL REINFORCED CONCRETE WALL DETAIL

LOCATION MAP
SCALE 1:NOT TO SCALE

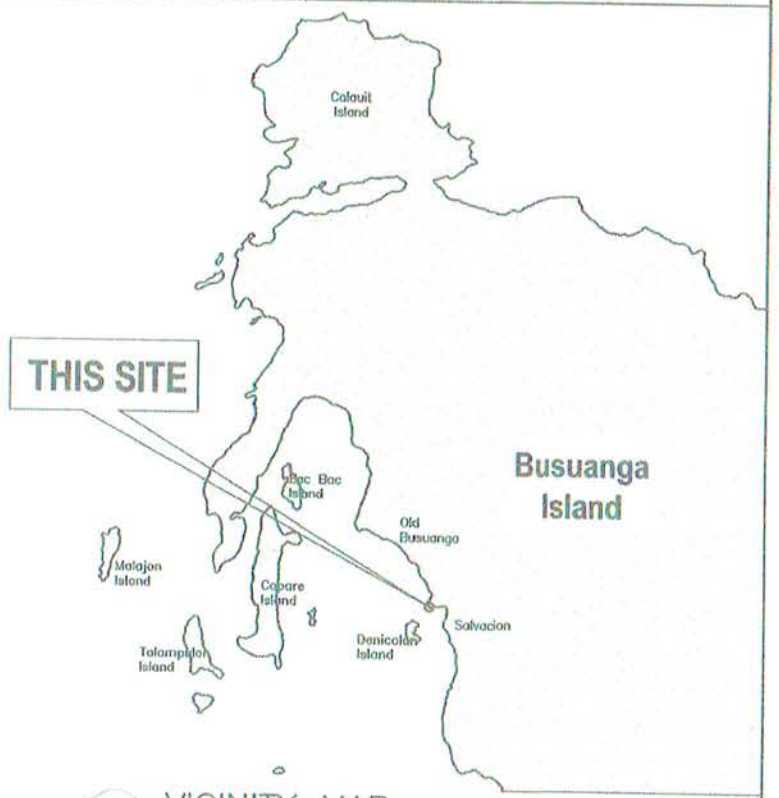

VICINITY MAP
SCALE 1:50,000 M

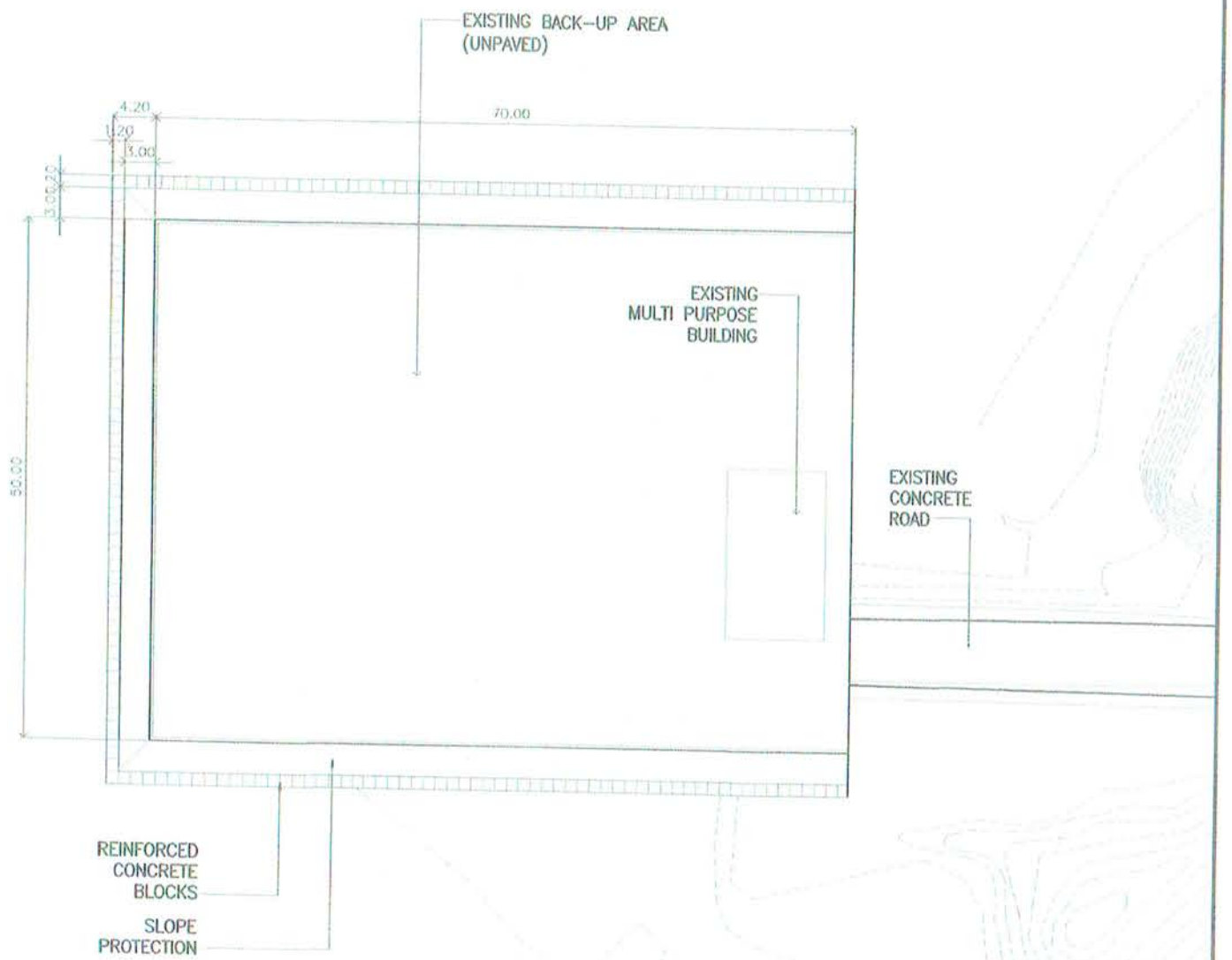

EXISTING PORT LAYOUT PLAN
SCALE 1:1000 M

PHILIPPINE PORTS AUTHORITY
PORT MANAGEMENT OFFICE - PALAWAN
PPA Administrative Building, Port Area, Poblacion, Brgy. Bagong Pag-asa, Puerto Princesa City, Palawan
Telefax: No. (048) 434 5428, Email address: pmopalawan@ppa.com.ph

PROJECT TITLE AND LOCATION	DRAWN BY	PREPARED BY	CHECKED/REVIEWED BY	SUBMITTED BY	RECOMMENDING APPROVAL	APPROVED	SHEET CONTENTS	SHEET NO.
BUSUANGA PORT DEVELOPMENT PORT OF BUSUANGA, PALAWAN	ALLAN P. ABOROT SUPERVISING ENGINEER A PMO-PALAWAN	NELSON Y. CAABAY, JR. PRINCIPAL ENGINEER A PMO-PALAWAN	MARLON N. SENDAYDIEGO ESD MANAGER PMO-PALAWAN	ELVIS R. MEDALLA ACTING PORT MANAGER PMO-PALAWAN	REYNAND C. PARAFINA PPDD MANAGER	CONSTANTE T. FARIÑAS, JR. AGM FOR ENGINEERING	VICINITY MAP LOCATION PLAN EXISTING PORT LAYOUT PLAN INDEX TO SHEETS FILE NAME :	C-1 01/07 DATE : JUNE 2018

GENERAL NOTES

1. DIMENSIONS ARE IN METERS AND ELEVATIONS ARE IN METERS UNLESS OTHERWISE NOTED. DATUM MLLW ELEV. 0.00.

2. VERIFY NEEDED DIMENSIONS AND ELEVATIONS OF EXISTING STRUCTURES IN THE FIELD.

3. PROVIDE CONCRETE COVERING FOR ALL REINFORCING STEEL AS FOLLOWS :

   FOR SLABS, BEAMS AND GIRDERS 100 MILLIMETER ON TOP AND 75 MILLIMETER ON UNDERSIDE, MEASURED FROM THE OUTER SURFACE OF THE CONCRETE TO THE NEAREST SURFACE OF THE STEEL .

4. SPLICES FOR MAIN BARS AT CRITICAL SECTION IF FOUND NECESSARY SHALL BE PROVIDED A MINIMUM LAP OF 40 BAR DIAMETER. ALL STEEL REINFORCEMENT SHALL BE DEFORMED BARS (fy=276 MPa) OTHERWISE SPECIFIED.

5. SPLICED BARS MAYBE JOINED TOGETHER BY FILLET ELECTRIC WELD IN WHICH CASE THE LAP SHALL BE AT LEAST 75 MILLIMETER . WELDING SHALL BE CONTINUOUS THROUGHOUT THE LENGTH OF THE LAP.

6. ALL INTERSECTION OF REINFORCING BARS MAY BE ELECTRICALLY SPOT WELDED IN LIEU OF TYING THEM WITH G.I. WIRES. WELDING ELECTRODES SHALL BE OF SHIELDED ARC TYPE HEAVILY COATED WITH CLASSIFICATION Nos. E 6010 OR 6011 OF THE AMERICAN WELDING SOCIETY AND SHALL BE SUITABLE FOR THE POSITIONS AND OTHER CONDITIONS OF INTENDED USE DIMENSIONS OF STEEL REINFORCEMENT ARE TO BE TAKEN ON CENTER OF BARS. BAR DETAILS ARE NOT TO SCALE. PROVIDE HOOKS AT OUTER ENDS OF TOP BARS ALONG EXTERIOR BAYS. HOOKS OF BARS SHALL HAVE A MINIMUM DIAMETER OF 4 TIMES THE DIAMETER OR SIDES OF BARS. DRAIN AND AIR HOLES SHALL BE PROVIDED AS INDICATED IN THE PLAN .

7. CONCRETE TO BE USED SHALL HAVE A CYLINDER STRENGTH OF 24 MPa (3500 psi) WITHIN 28 DAYS UNLESS OTHERWISE SPECIFIED

8. ALL STRUCTURAL STEEL SHALL BE ASTM A-36 OR JIS 3101 .

9. D. ALL REINFORCING BARS SHALL CONFORM WITH ASTM A615. ALL REINFORCING STEEL BARS SHALL BE INTERMEDIATE GRADE WITH ULTIMATE STRENGTH (fy) OF 276 MPa OR 40,000 psi (GRADE 40) FOR 12mmØ AND BELOW AND 414 MPa OR 60,000 psi (GRADE 60) FOR 16mmØ AND ABOVE.

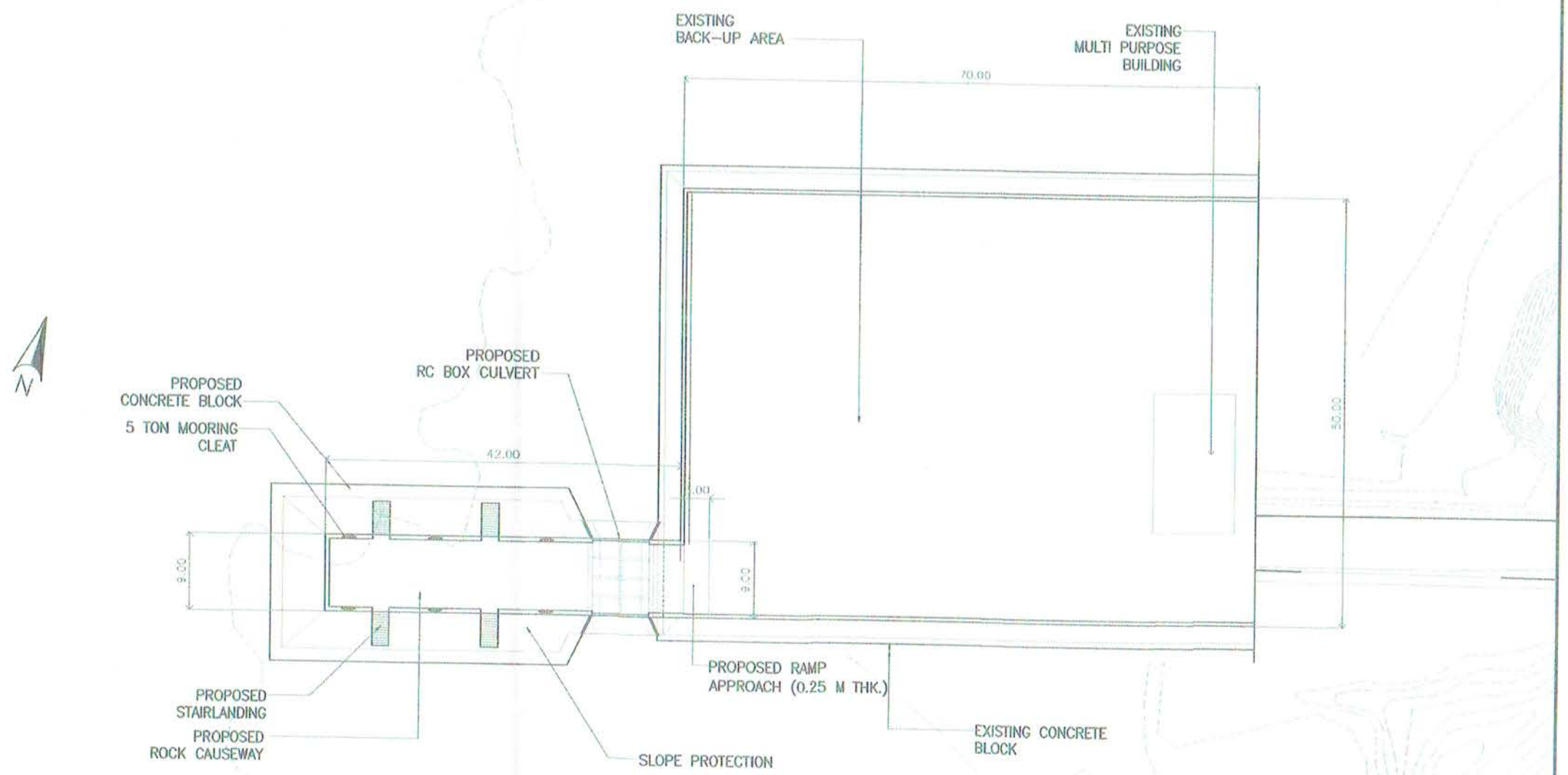

PROPOSED PORT DEVELOPMENT PLAN
SCALE 1:600 M

PHILIPPINE PORTS AUTHORITY PORT MANAGEMENT OFFICE - PALAWAN	PROJECT TITLE AND LOCATION	DRAWN BY	PREPARED BY	CHECKED/REVIEWED BY	SUBMITTED BY	RECOMMENDING APPROVAL	APPROVED	SHEET CONTENTS	SHEET NO.
	BUSUANGA PORT DEVELOPMENT PORT OF BUSUANGA, PALAWAN	ALLAN P. ABOROT SUPERVISING ENGINEER A PMO-PALAWAN	NELSON Y. CAABAY, JR. PRINCIPAL ENGINEER A PMO-PALAWAN	MARLON N. SENDAYDIEGO ESD MANAGER PMO-PALAWAN	ELVIS R. MEDALLA ACTING PORT MANAGER PMO-PALAWAN	REYNAND C. PARAFINA PPDD MANAGER	CONSTANTE T. FARIÑAS, JR. AGM FOR ENGINEERING	PROPOSED PORT DEVELOPMENT PLAN GENERAL NOTES FILE NAME :	C-2 02 07 DATE : JUNE 2018

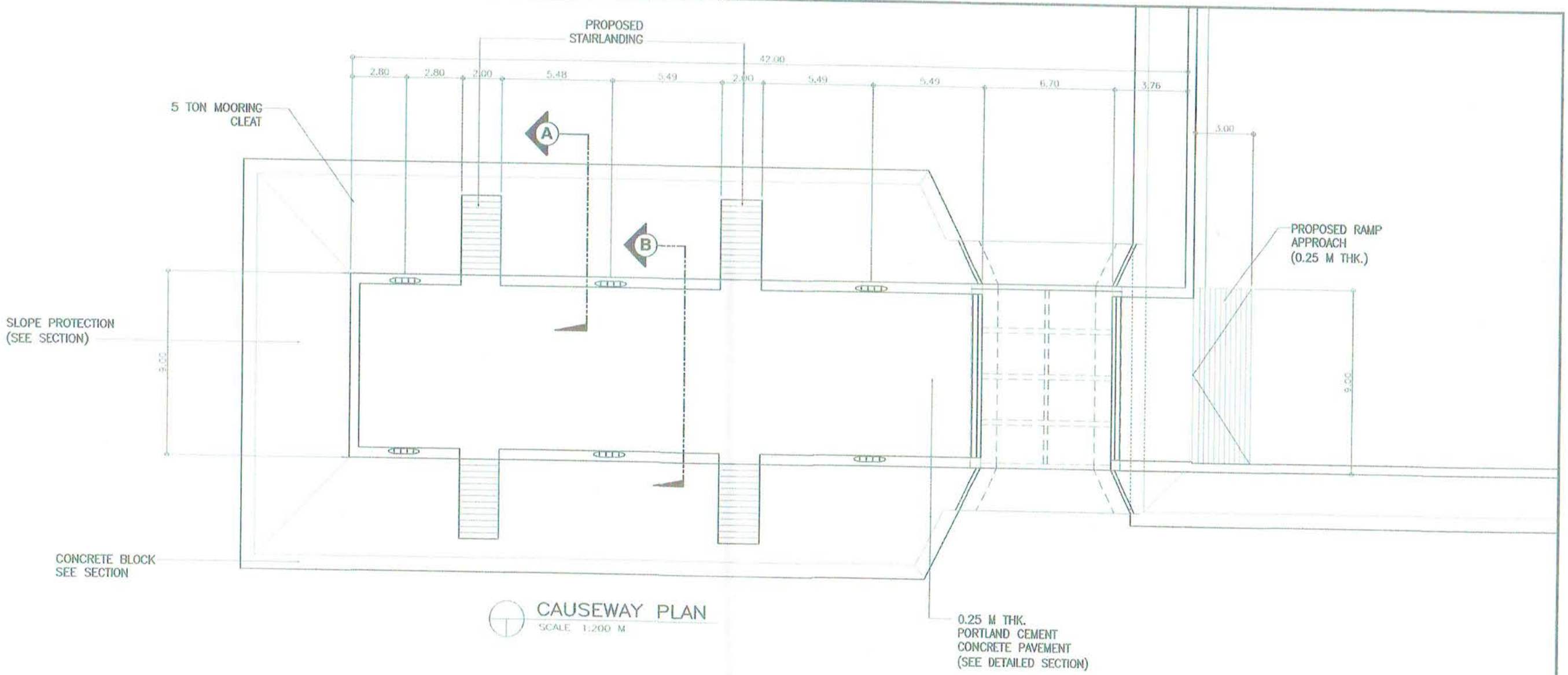

CAUSEWAY PLAN
SCALE 1:200 M

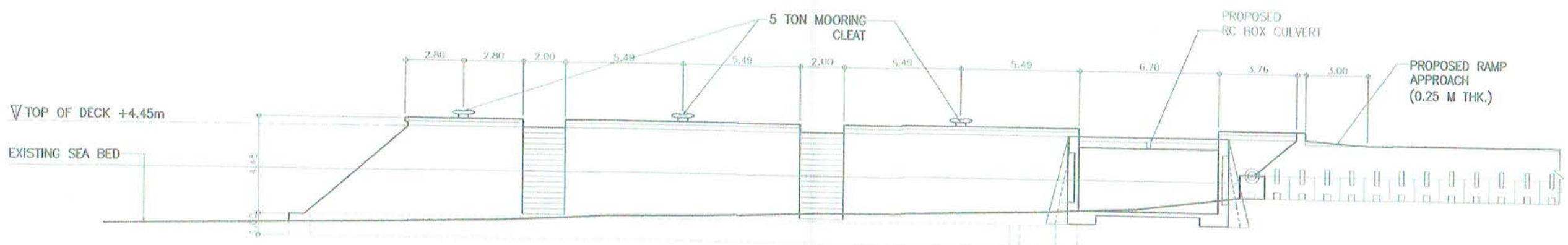

CAUSEWAY ELEVATION
SCALE 1:200 M

PHILIPPINE PORTS AUTHORITY PORT MANAGEMENT OFFICE - PALAWAN	PROJECT TITLE AND LOCATION	DRAWN BY	PREPARED BY	CHECKED/REVIEWED BY	SUBMITTED BY	RECOMMENDING APPROVAL	APPROVED	SHEET CONTENTS	SHEET NO.
	BUSUANGA PORT DEVELOPMENT PORT OF BUSUANGA, PALAWAN	ALLAN P. ABOROT SUPERVISING ENGINEER A PMO-PALAWAN	NELSON Y. CAABAY, JR. PRINCIPAL ENGINEER A PMO-PALAWAN	MARLON N. SENDAYDIEGO ESD MANAGER PMO-PALAWAN	ELVIS R. MEDALLA ACTING PORT MANAGER PMO-PALAWAN	REYNAND C. PARAFINA PPDD MANAGER	CONSTANTE T. FARIÑAS, JR. AGM FOR ENGINEERING	CAUSEWAY PLAN CAUSEWAY ELEVATION FILE NAME :	C-3 03 07 DATE : JUNE 2018

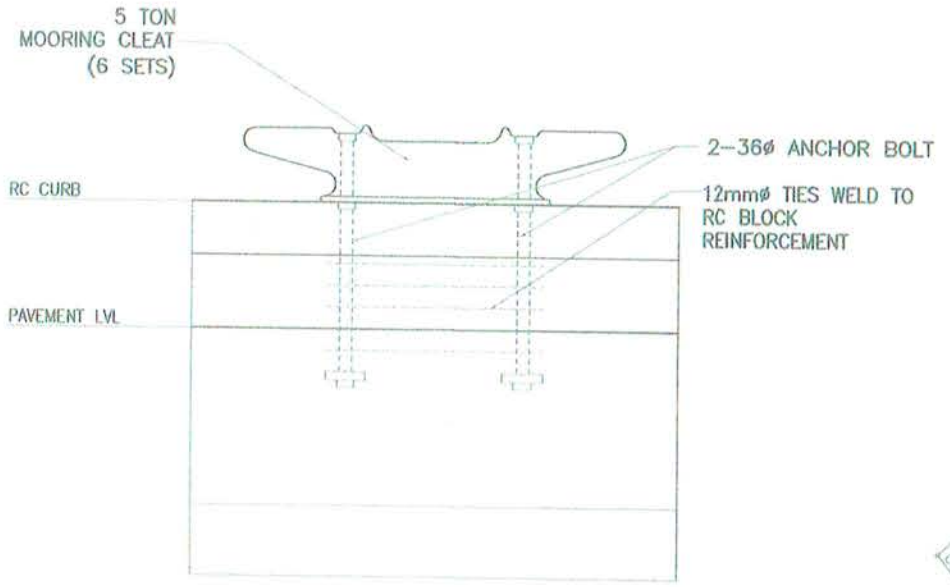

MOORING CLEAT DETAIL
SCALE 1:20 M

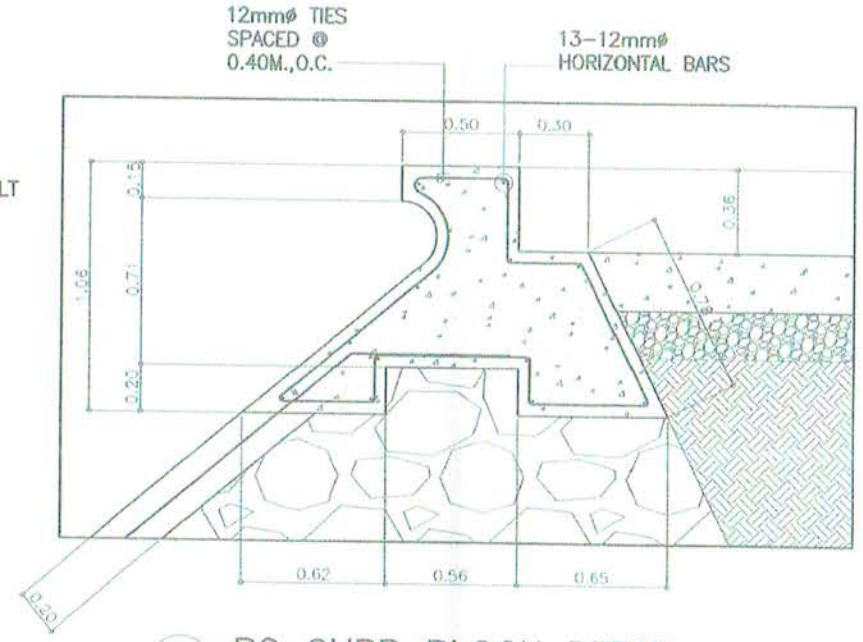

RC CURB BLOCK DETAIL
SCALE 1:30 M

NOTE :

ALL ROCKS TO BE USED SHALL HAVE A SPECIFIC GRAVITY OF 2.65 AND SHALL BE ANGULAR, ROUGH SURFACE, DURABLE AND WILL NOT EASILY DISINTEGRATE UNDER LONG EXPOSURE TO SEA WATER.

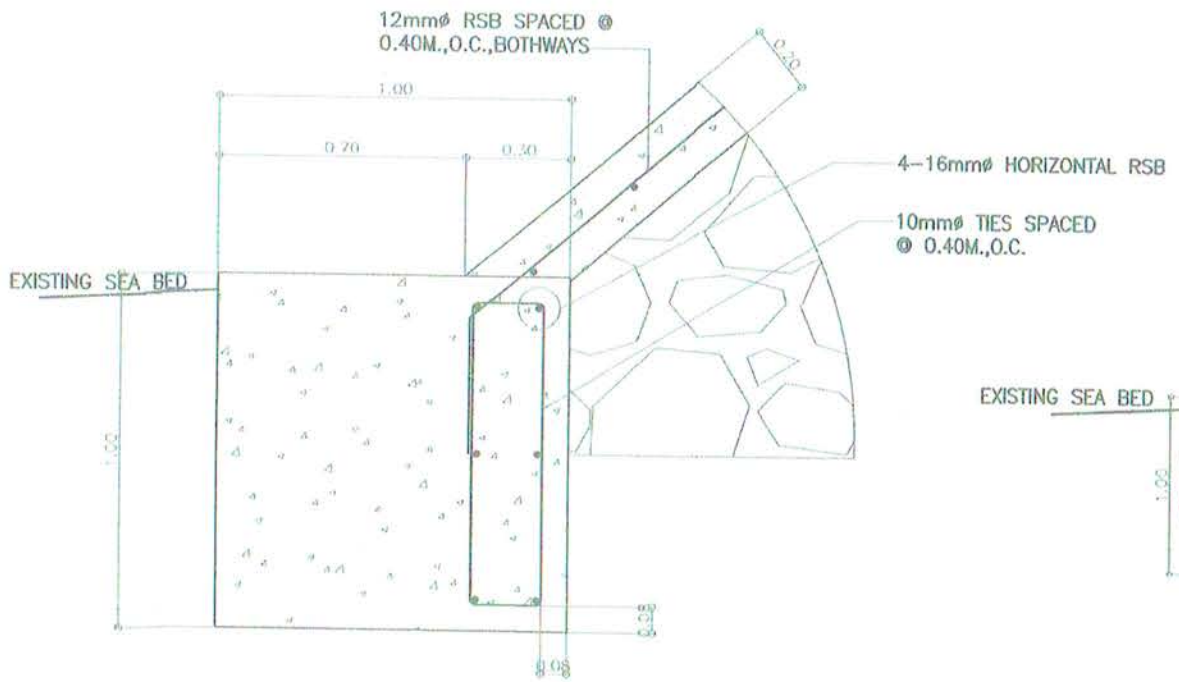

RETAINING CONCRETE BLOCK DETAIL
SCALE 1:20 M

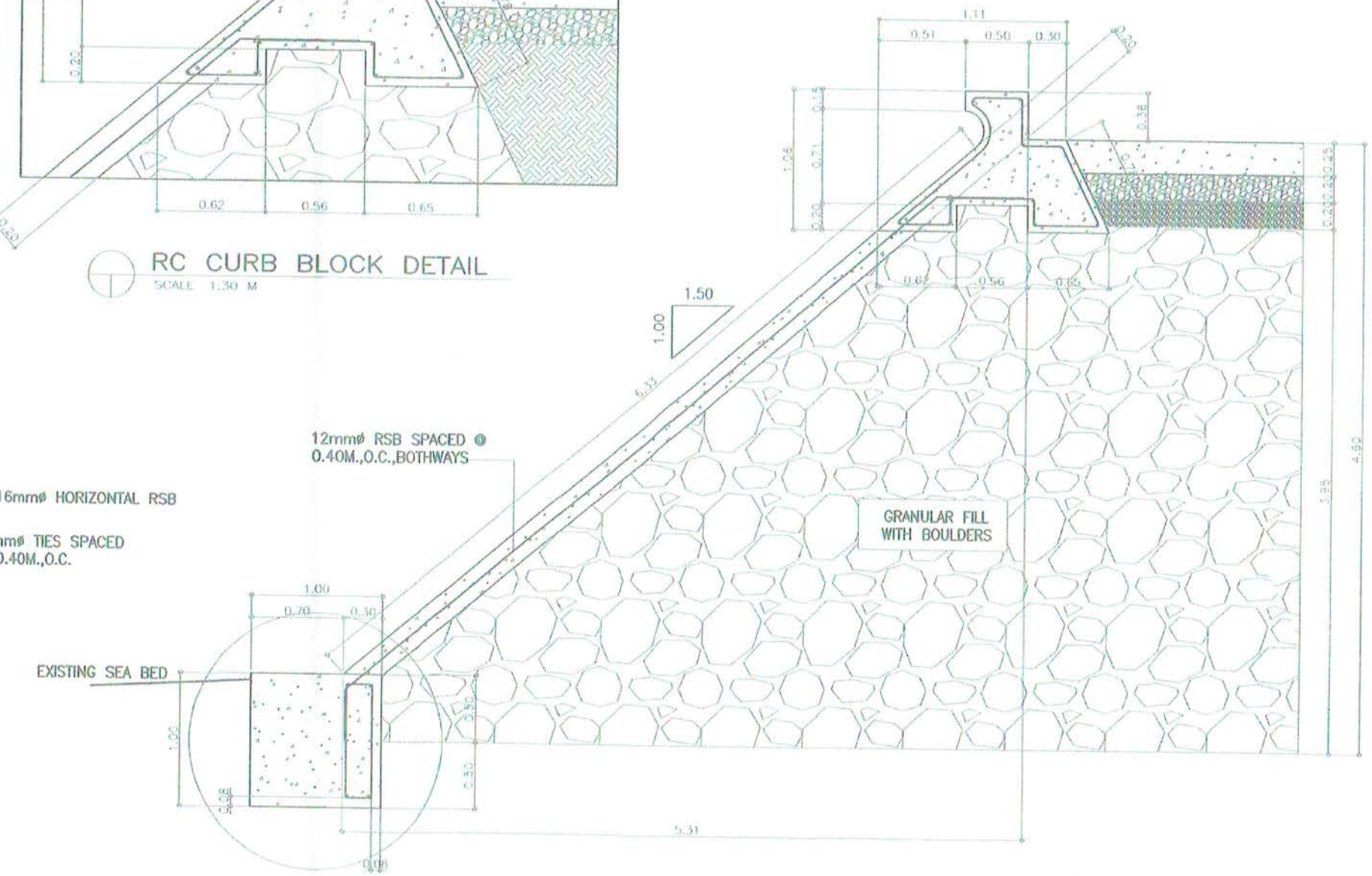

TYP. SLOPE PROTECTION DETAIL
SCALE 1:40 M

PHILIPPINE PORTS AUTHORITY PORT MANAGEMENT OFFICE - PALAWAN	PROJECT TITLE AND LOCATION	DRAWN BY	PREPARED BY	CHECKED/REVIEWED BY	SUBMITTED BY	RECOMMENDING APPROVAL	APPROVED	SHEET CONTENTS	SHEET NO.
	BUSUANGA PORT DEVELOPMENT PORT OF BUSUANGA, PALAWAN	ALLAN P. ABOROT SUPERVISING ENGINEER A PMO–PALAWAN	NELSON T. CAABAY, JR. PRINCIPAL ENGINEER A PMO–PALAWAN	MARLON N. SENDAYDIEGO ESD MANAGER PMO–PALAWAN	ELVIS R. MEDALLA ACTING PORT MANAGER PMO–PALAWAN	REYNAND C. PARAFINA PPDD MANAGER	CONSTANTE T. FARIÑAS, JR. AGM FOR ENGINEERING	TYP. SLOPE PROTECTION DETAIL RC CURB BLOCK DETAIL, RETAINING CONCRETE BLOCK DETAIL MOORING CLEAT DETAIL FILE NAME :	C-4 04 07 DATE : JUNE 2018

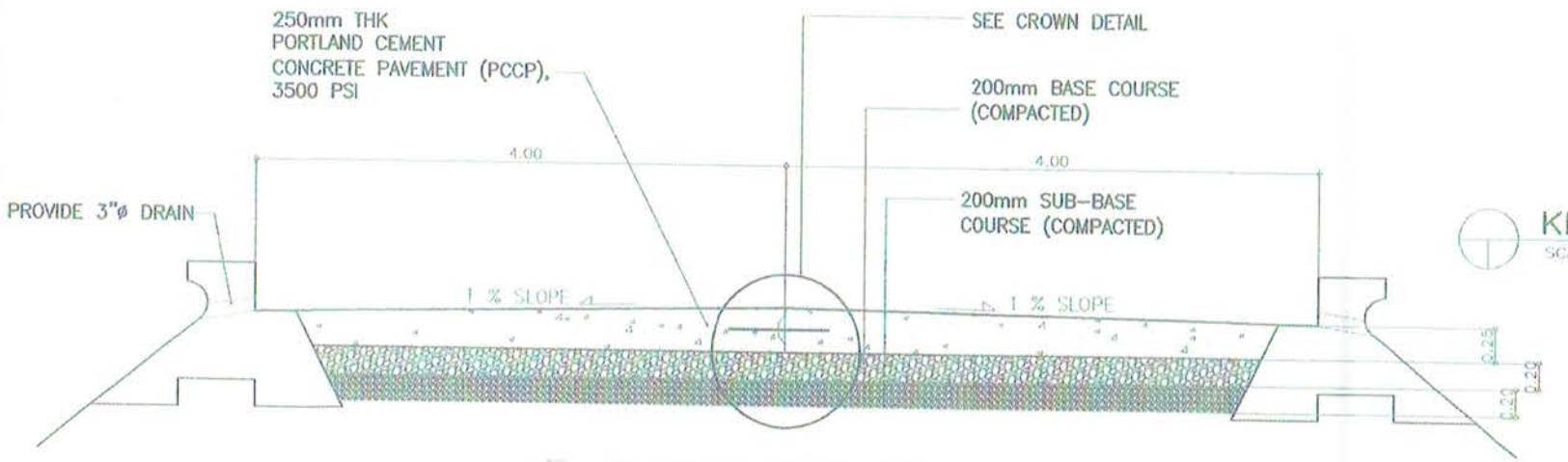

SECTION THRU "B"
SCALE 1:40 M

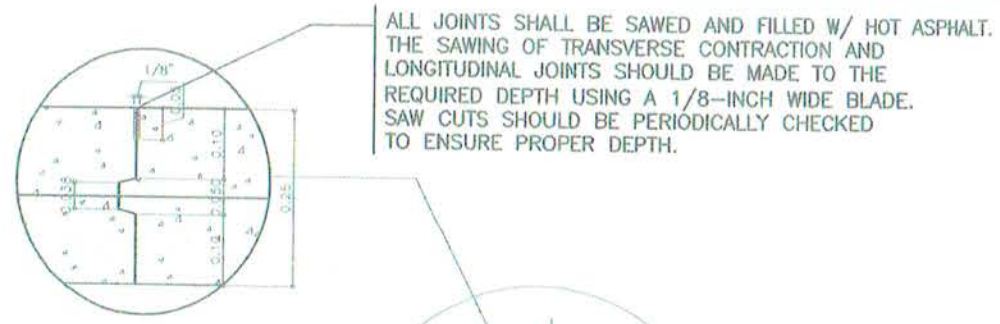

KEYED PAVEMENT DETAIL
SCALE 1:10 M

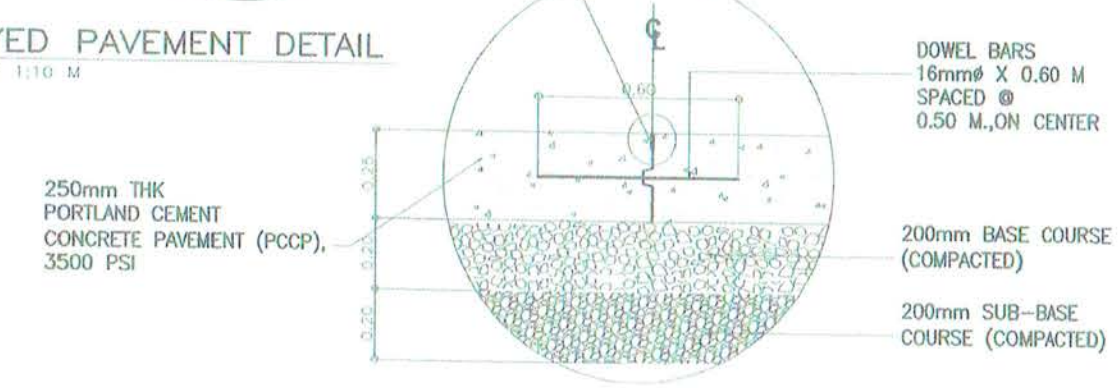

RCCP CROWN DETAIL
SCALE 1:20 M

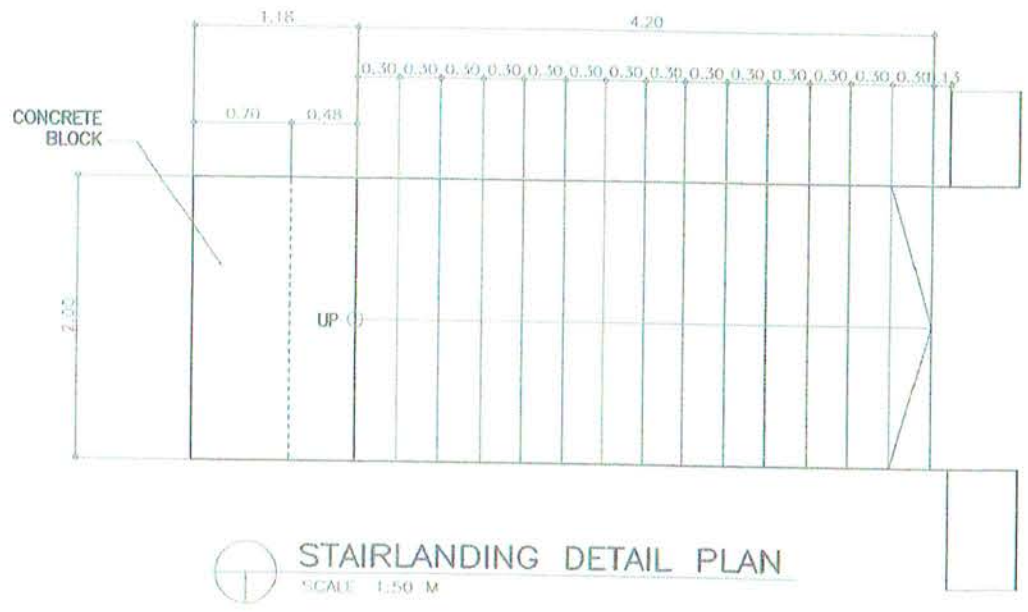

STAIRLANDING DETAIL PLAN
SCALE 1:50 M

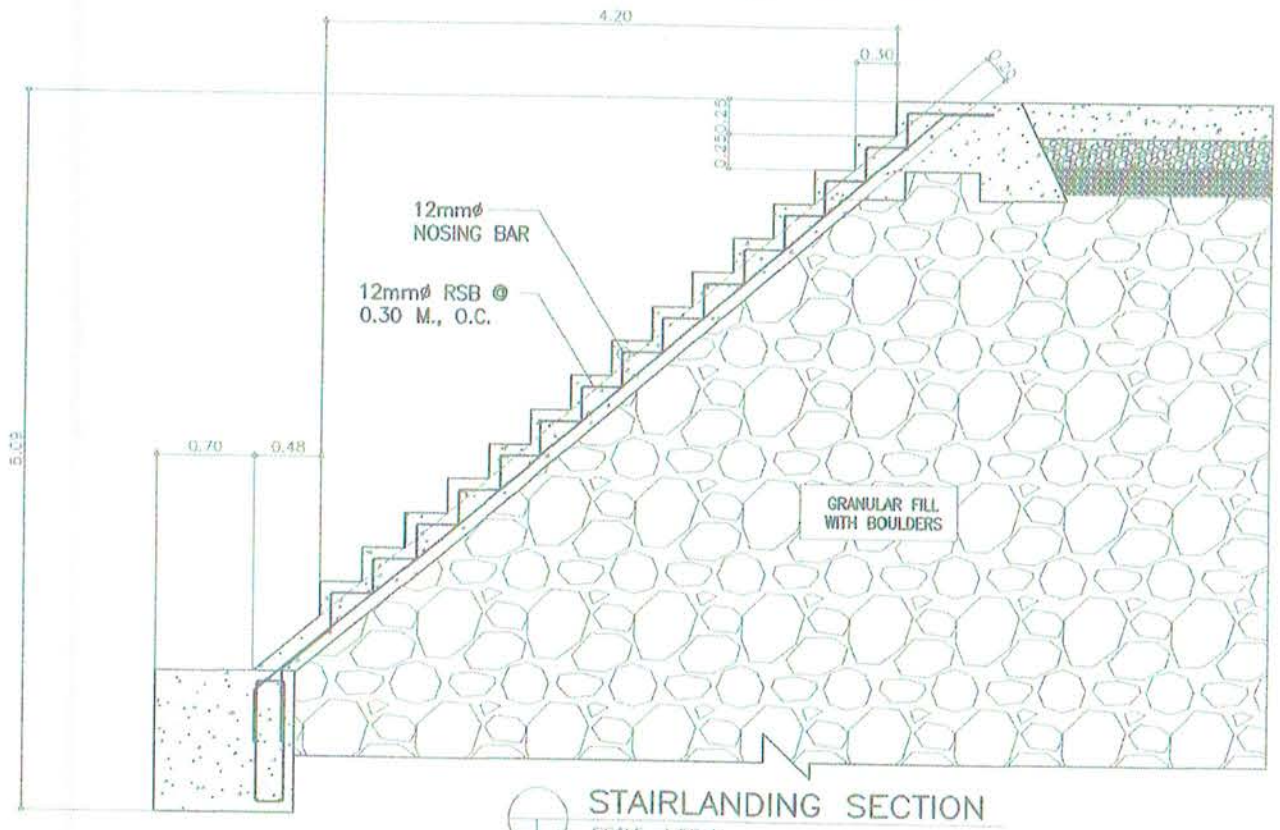

STAIRLANDING SECTION
SCALE 1:50 M

PHILIPPINE PORTS AUTHORITY PORT MANAGEMENT OFFICE - PALAWAN PPA Administrative Building, Port Area Port Area, Brgy. Bagong Pag-asa, Puerto Princesa City, Palawan Telefax: Nos. (048) 434-5620, Email address: pmopalawan@ppa.com.ph	PROJECT TITLE AND LOCATION BUSUANGA PORT DEVELOPMENT PORT OF BUSUANGA, PALAWAN	DRAWN BY ALLAN P. ABOROT SUPERVISING ENGINEER A PMO-PALAWAN	PREPARED BY NELSON Y. CAABAY, JR. PRINCIPAL ENGINEER A PMO-PALAWAN	CHECKED/REVIEWED BY MARLON N. SENDAYDIEGO ESD MANAGER PMO-PALAWAN	SUBMITTED BY ELVIS R. MEDALLA ACTING PORT MANAGER PMO-PALAWAN	RECOMMENDING APPROVAL REYNAND C. PARAFINA PPDD MANAGER	APPROVED CONSTANTE T. FARIÑAS, JR. AGM FOR ENGINEERING	SHEET CONTENTS SECTION THRU "B" RCCP CROWN DETAIL STAIRLANDING PLAN & SECTION KEYED PAVEMENT DETAIL FILE NAME :	SHEET NO. C-5 05 07 DATE : JUNE 2018

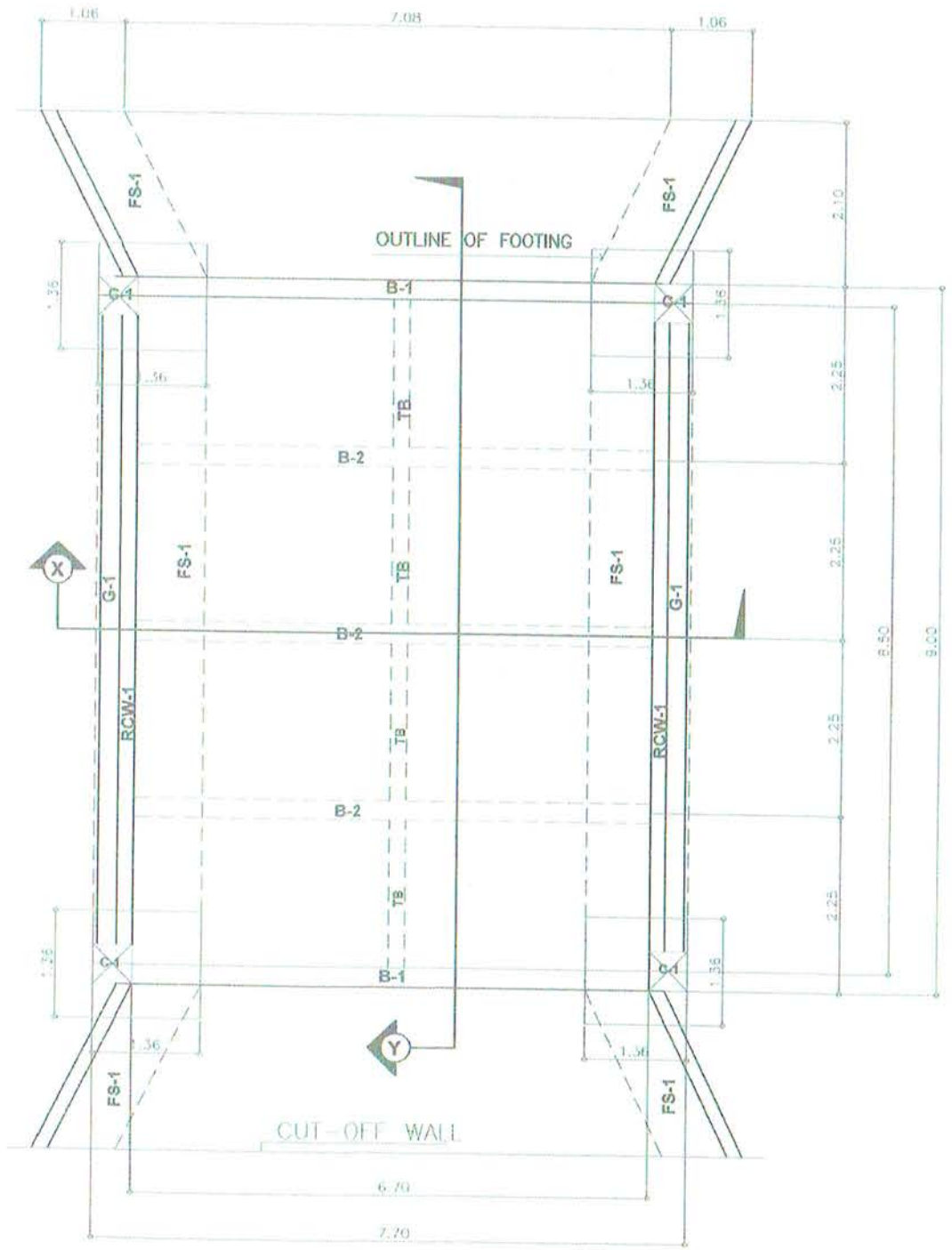

FOUNDATION PLAN– BOX CULVERT
SCALE 1:80 M

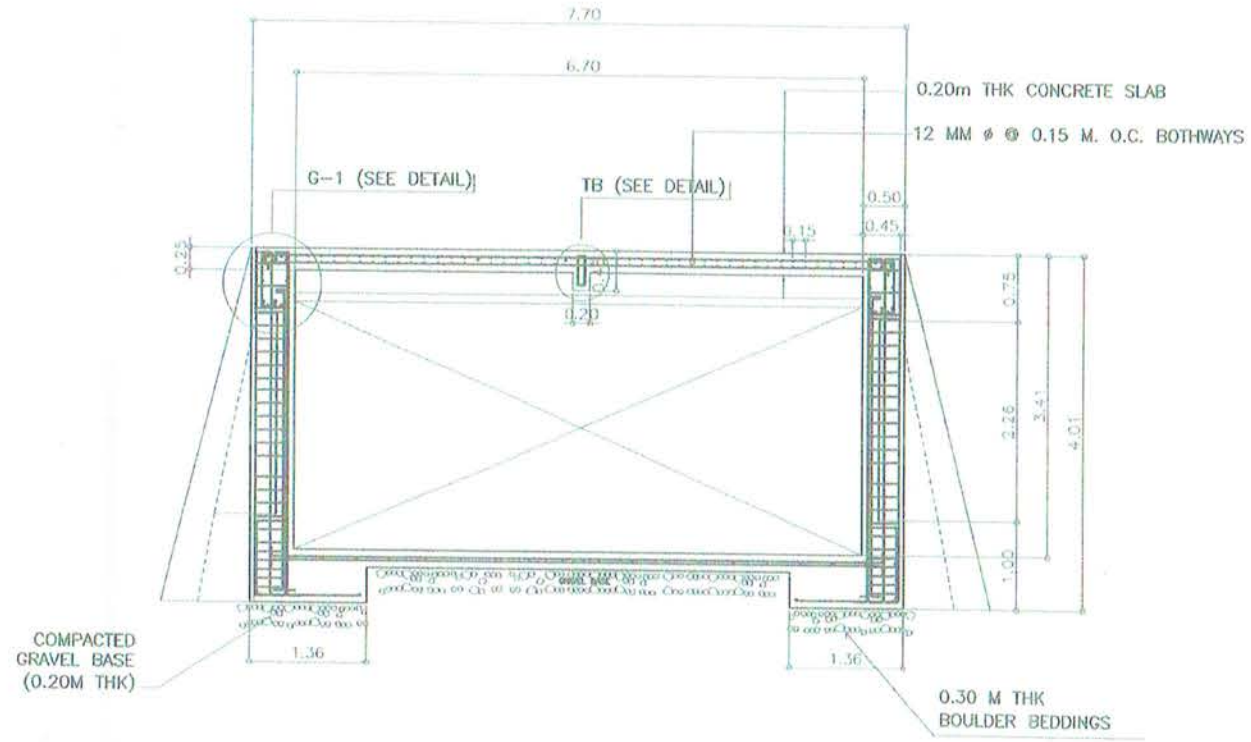

PROPOSED SECTION "X"
SCALE 1:80 M

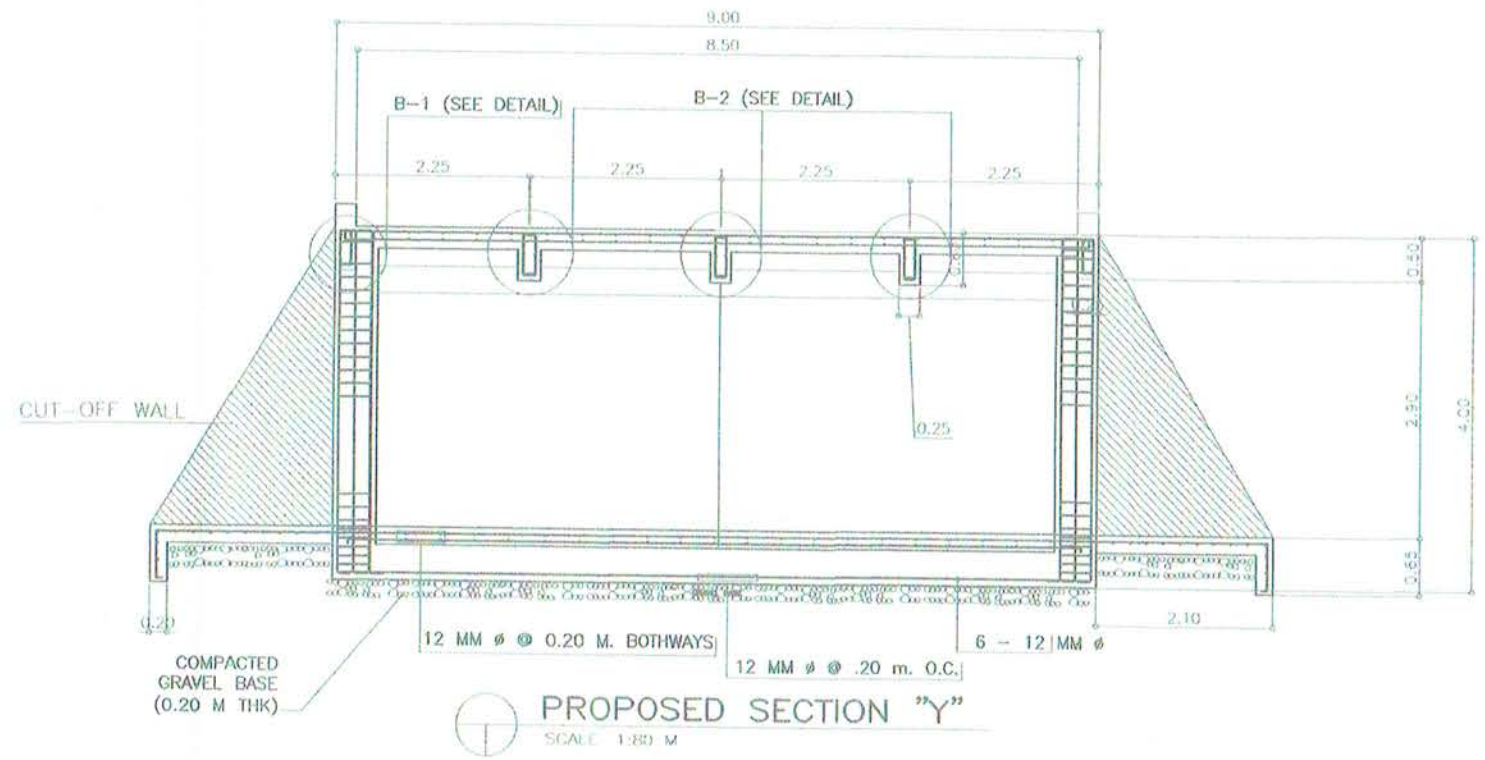

PROPOSED SECTION "Y"
SCALE 1:80 M

PHILIPPINE PORTS AUTHORITY PORT MANAGEMENT OFFICE – PALAWAN	PROJECT TITLE AND LOCATION	DRAWN BY	PREPARED BY	CHECKED/REVIEWED BY	SUBMITTED BY	RECOMMENDING APPROVAL	APPROVED	SHEET CONTENTS	SHEET NO.
	BUSUANGA PORT DEVELOPMENT PORT OF BUSUANGA, PALAWAN	ALLAN P. ABOROT SUPERVISING ENGINEER A PMO–PALAWAN	NELSON V. CAABAY, JR. PRINCIPAL ENGINEER A PMO–PALAWAN	MARLON M. SENDAYDIEGO ESD MANAGER PMO–PALAWAN	ELVIS R. MEDALLA ACTING PORT MANAGER PMO–PALAWAN	REYNAND C. PARAFINA PPDD MANAGER	CONSTANTE T. FARIÑAS, JR. AGM FOR ENGINEERING	PROPOSED FOUNDATION PLAN PROPOSED SECTION "X" PROPOSED SECTION "Y" FILE NAME :	C-6 06 07 DATE : JUNE 2018

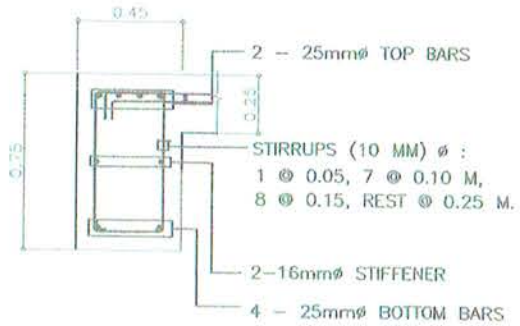

AT SUPPORT

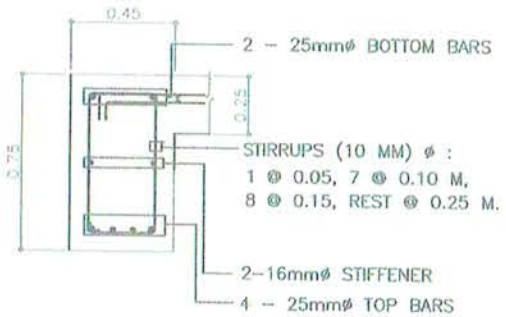

AT MIDSPAN

G–1 DETAIL
SCALE 1:30 M

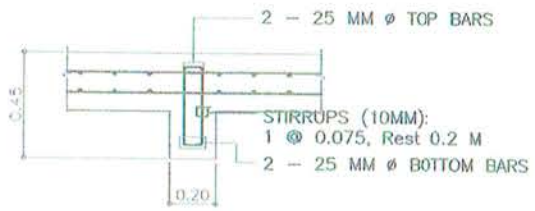

TB DETAIL
SCALE 1:30 M

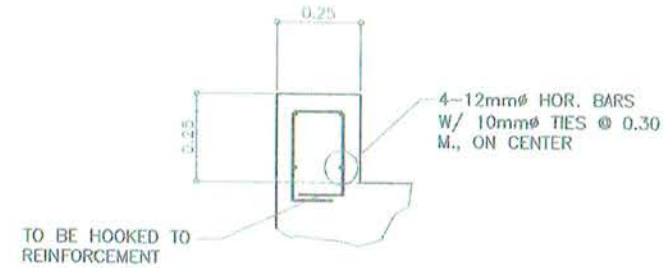

RC CURB DETAIL
SCALE 1:20 M

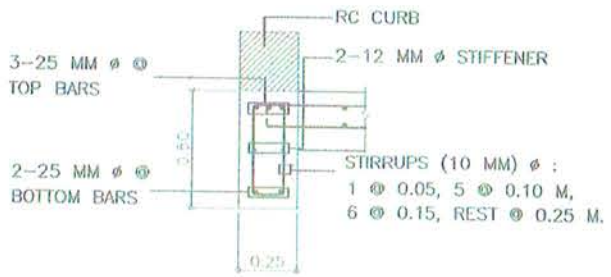

AT SUPPORT

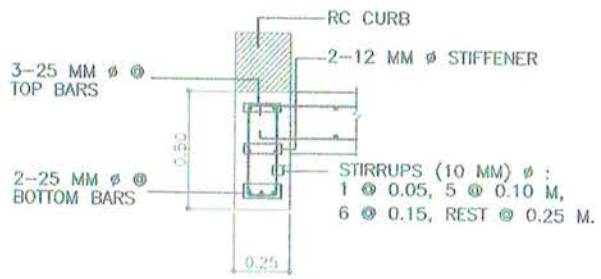

AT MIDSPAN

B–1 DETAIL
SCALE 1:30 M

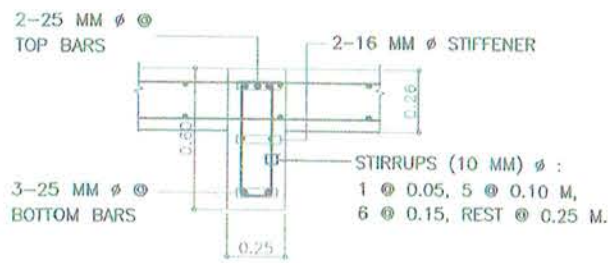

AT SUPPORT

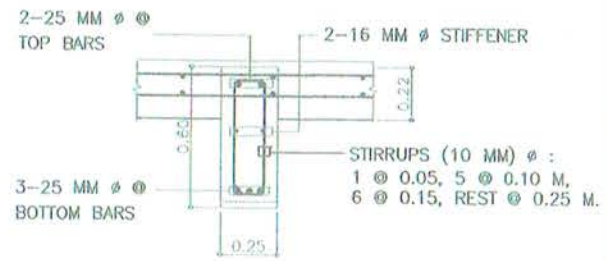

AT MIDSPAN

B–2 DETAIL
SCALE 1:30 M

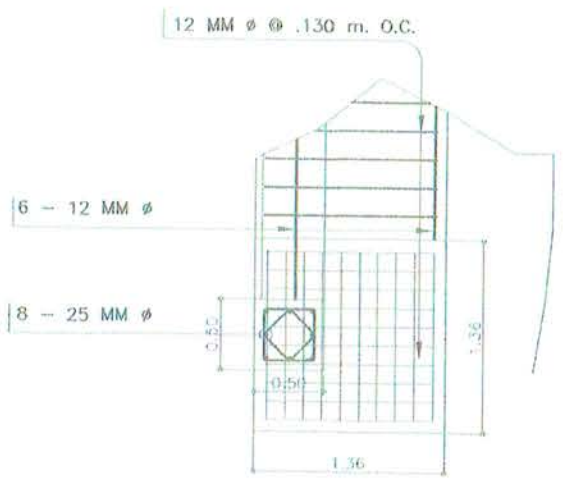

C–1/FS DETAIL
SCALE 1:50 M

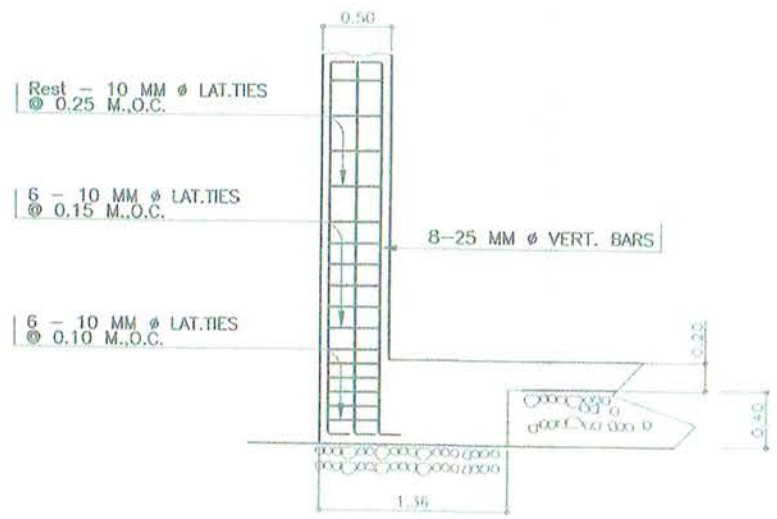

C–1 DETAIL
SCALE 1:50 M

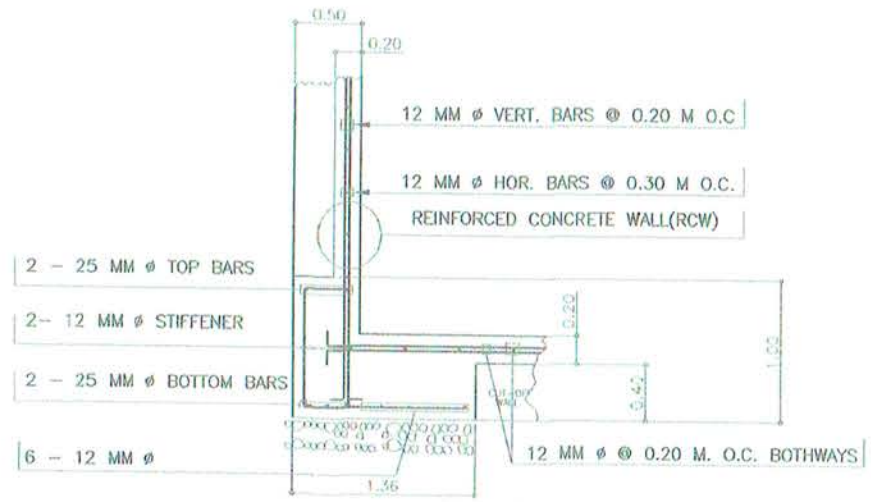

REINFORCED CONCRETE WALL DETAIL
SCALE 1:50 M

PHILIPPINE PORTS AUTHORITY PORT MANAGEMENT OFFICE – PALAWAN	PROJECT TITLE AND LOCATION	DRAWN BY	PREPARED BY	CHECKED/REVIEWED BY	SUBMITTED BY	RECOMMENDING APPROVAL	APPROVED	SHEET CONTENTS	SHEET NO.
	BUSUANGA PORT DEVELOPMENT PORT OF BUSUANGA, PALAWAN	ALLAN F. ABOBOT SUPERVISING ENGINEER A PMO–PALAWAN	NELSON Y. CAABAY, JR. PRINCIPAL ENGINEER A PMO–PALAWAN	MARLON N. SENDAYDIEGO ESD MANAGER PMO–PALAWAN	ELVIS R. MEDALLA ACTING PORT MANAGER PMO–PALAWAN	REYNAND C. PARAFINA PPDD MANAGER	CONSTANTE T. FARIÑAS, JR. AGM FOR ENGINEERING	G1 DETAIL; TB DETAIL; RC CURB B1 DETAIL; B2 DETAIL C1/FS DETAIL; C1 DETAIL REINFORCED CONCRETE WALL DETAIL FILE NAME :	C-7 07 07 DATE : JUNE 2018