ITEM 25 b : FINISHES (INDENT ORDERS)

GENERAL NOTES

The contractor should observe special consideration to indent order items that require longer lead time and checking of material availability under specified conditions of sale, the acceptance of which by the supplier constitutes a contract of sale.

The following are listed as the indent items:

- Aluminum Composite Panels
- Photoluminescent Signs and markings
- Furnitures
- Signanges and logos

ITEM 25 c: CARPENTRY AND JOINERY WORKS

SCOPE OF WORK

The work shall consist of furnishing all tools, labor, equipment and materials, unless otherwise specified to complete all carpentry and joinery works shown on the Drawings and specified herein.

GENERAL REQUIREMENTS

a. Lumber Grades

Lumber shall be of the best grade available, of the respective kinds required for the various parts of work; well seasoned, thoroughly dry and free from loose or unsound knots, sap, shakes or other imperfections impairing its strengths, durability and appearance. All exposed woodwork shall be smooth by dressed and sandpapered unless otherwise indicated or specified. Framing lumber shall be of the rough dimensions unless otherwise shown on the drawings.

b. Substitution of Lumber

Any lumber equally good for the purpose intended maybe substituted for the kind specified, subject to prior written approval of the Engineer. Provided, however, that in the substitution of the cheaper kind of lumber than that specified, a reduction in the contract price equal to the difference in the costs of the two kinds of lumber shall be made.

c. Delivery and Storage

The Contractor shall deliver lumber to the site in undamaged condition. Lumber shall be stacked in such a manner as to insure proper ventilation and drainage, and shall be supported at least 150 mm above-ground. Lumber shall be protected against dampness before and after delivery, and enough protection under cover in well ventilated enclosure, not exposed to extreme changes of temperature and humidity; and in a manner as to provide air-circulation around all surfaces of each pile to insure thorough air-seasoning. Lumber or millwork in buildings shall not be finished until concrete, masonry work and plaster are dry. Lumber shall be delivered at least thirty (30) days before use.

d. Grading of Plywood

Each sheet of plywood shall bear the mark identifying the plywood as to wood species, glue type and grade.

MATERIALS

a. Lumber

Lumber for various uses shall be one of the species listed for the purpose indicated unless otherwise specified in the drawing. For any use not specified, the lumber shall be the best commercial grade normally used for the purpose, subject to the approval of the Engineer.

All framings shall be done as far as possible with carefully fitted mortise and tenon joints.

All doors, windows, transoms, or other opening where so indicated on plans, shall have frames and sills of the dimensions shown or as hereafter detailed, and all frames coming in contact with concrete shall be anchored by means of 20-d nails, spaced not more than 0.20m, apart, all around the contract surfaces. All frames shall be rabetted , molded and cut with saw and cut under for water drips.

SPECIE	U S E
Yakal	All door jambs, headers and transom bars, wood plates and all other woodwork in contact with concrete or masonry and where indicated.
Apitong (pressure treated)	All truss members and rafters and where indicated; all wood framings and carpentry, except when in contact with concrete.
Tanguile (Kiln dried)	All exterior and interior mill work, siding, finish and trim, frame work and all other wood works not specifically mentioned; except when in contact with concrete.

b. Plywood

Plywood shall conform to Commercial Standard PSI and shall be of local manufacture.

Plywood to be varnished shall be tanguile or kalantas veneers (as indicated), ribbon grained, water resistant, Class B and of the thickness indicated.

Plywood to be painted shall be tanguile veneer ordinary rotary-cut, water resistant, Class C and of thickness indicated.

Plywood exposed to the outside elements or where indicated shall be waterproof or marine plywood and of the thickness indicated.

c. Fastenings

Fastenings shall be common nails, glue or specified, flat-head wood screws (F.H.W.S.), rough-head wood screws (R.H.W.S.), bolts or lag screws where specified or called for shall be used. Conceal fastenings as much as possible; where not possible, locate them in inconspicuous places, where nailing is permitted through woodwork smooth-finished face, conceal nail heads.

1. Nails

Shall be of the smooth shank, zinc coated, common wire nails of local manufacture, and of types and sizes best suited for the purpose.

2. Wood Screws

Shall be brass or cadmium plated of the best available commercial quality, and of types and sizes suited for the purpose.

PRESSURE TREATED LUMBER

a. Preservative Treatment

All lumber indicated to be pressure treated, shall contain any of the following net retention of solid preservative.

a. Boliden Salts - 45.5 kg. dry chemical per cubic foot of wood
b. Wolman Salts - 0.31 kg. dry chemical per cubic foot of wood

c. Tenalith Salts - 0.34 kg. dry chemical per cubic foot of wood

The Contractor shall submit an affidavit signed by an official of the preservative treatment company to the Engineer. This affidavit shall indicate the net retention of solid preservatives obtained and shall certify that pressure treated lumbers have a moisture content that does not exceed 17 percent upon shipment from the treatment plant.

Where it is necessary to cut or bore pressure-treated lumber on the job, two coats of prepared concentrated preservatives solution shall be applied to the end-cut or bored surfaces.

ROUGH CARPENTRY

All work shall be well fitted, accurately set, and rigidly secured in place. Anchors and bolts (with nuts and washers) straps and tie rods shall be provided as required.

a. Cutting and Fitting

Cutting and fitting to accommodate other work shall be done in the required manner, and cut or damaged work shall be patched and made good.

b. Framing and Structural

Framing and structural lumber shall be well-seasoned, straight, square-edge stacks, and free from loose or unsound knots, bark edges or other defects that will impair its strength.

c. Plates for Walls and Partitions

Plates for walls and partitions shall be of the same width as the studs and shall form continuous horizontal ties.

Structural members shall not be cut, bored or notched for the passage of pipes or conduits without prior approval of the Engineer. All members damaged by such cutting or boring shall be reinforced by means of specially formed and approved sheet metal or steel shapes or remove or replaced with new member as directed.

Anchors, connectors and fastenings not indicated or specified otherwise shall be of the size and types necessary to suit the conditions encountered. Size, type and spacing of nails, screws or bolts for installation of manufactured building materials shall be as recommended by the product manufacturer unless indicated or specified otherwise.

Rough hardware, exposed to weather or in contact with exterior walls or masonry or slabs shall be zinc-coated except as specified otherwise.

All lumber surfaces in contact with concrete or masonry shall be given a brush coat of bituminous paint before installation.

JOINERY WORK

All lumber used for the joinery work shall be of the kinds and grades specified and shall be of the contours, patterns and profiles indicated.

All joints shall be made, installed tight and securely fastened in a manner approved by the Engineer. Exterior joints shall be mitered and interior angles coped. Panels shall be fitted to allow for shrinkage, avoid swelling, and insure that the work remain in place without warping, splitting and opening of joints.

Interior trims shall be approved standard stock moldings, except where special patterns or profiles are indicated.

Joints for cabinet work shall be glued in addition to nails or other fastening device required. Nailing shall be concealed where practicable. Where face nailing is used, nails shall be set for putty stopping.

All exposed surfaces shall be machined or hand sanded finished to an even smooth surface. No hammer marks or other unsightly marks shall be allowed on any wood panel or veneer.

WOOD LAMINATES AND WOOD PLASTIC COMPOSITE PANELS

INTRODUCTION

a. Wood Laminate

A wood laminate is a thin sheet of material used to cover the core of a wood project in order to change the appearance of the material. Laminates may be any material, but typically they are made veneers, which are thin sheets of wood.

High-pressure decorative laminates are characterized by their qualities, durability, and functional performance. High-pressure laminate sheets are available in a wide variety of colours, patterns and surface finishes. They are resistant to wear, scratching, impact, moisture, heat, and staining; and possess good hygienic and anti-static properties, being easy to clean and maintain.

b. Wood-plastic composite

Wood-Plastic Composite architectural products are a sustainable timber alternative with added benefits such as durability and strength.

SCOPE OF WORK

This item shall consist of furnishing all wood laminates and wood composite panels materials, labor, tools and equipment required in undertaking the proper installation as shown on the Plans and in accordance with this specifications.

SPECIFICATIONS

a. Wood Laminates: 6mm THK substrate laminated on HPL Accent Matte Finish for Interior Cladding or any approved equivalent by the designing Architect.

b. Wood Composite Panels: Supply and Installation of Wood-Plastic Composite panels in sizes: 500mm X 45mm X 50mm including angle bracket support or any approved equivalent by the designing Architect.

SUBMITTALS

a. Product Data

Manufacturer's printed product literature, specifications, and data sheets

b. Shop Drawings

Indicate project layout; dimensions and thickness of panels; connections; details and locations of joints and sealant; methods of anchorage; number of anchors; supports; reinforcement; flashings; accessories; materials; and finishes.

c. Samples

1. Sample materials for selection and verification of finishes, colors, and textures.

2. Sample of panel assembly.

QUALITY ASSURANCE

a. Fabricator / installer to be accepted by the manufacturer.

b. Fabricator / installer to have work similar in scope and size to this project.

c. Take field measurements prior to completion of shop manufacture or fabrication. Coordinate fabrication schedule with construction progress to avoid delay of work. Field fabrication should be allowed to ensure proper fit and keep it to minimum with majority of fabrication being done under controlled shop conditions.

PREPARATION

Ensure surfaces to receive wood laminates and wood-plastic composite panels are structurally leveled, even, smooth, clean, dry, and free from defects detrimental to work. Notify consultant thru writing of conditions unfavorable to proper and timely completion of work. Do not proceed with erection until unsatisfactory conditions have been corrected.

ACCESSORIES

Screws, nuts, washers, bolts, rivets, angle bars and other miscellaneous fastening devices shall be made of non-corrosive materials such as aluminum and stainless steel.

ITEM 25 b : PAINTING

GENERAL

General Requirements contain provisions and requirements essential to these Specifications; and apply to this section, whether or not referred to herein.

SCOPE OF WORK

This Section covers the surface preparation, coating materials and application of coatings systems required for the Works.

The work shall consist of furnishing of all labor, materials, equipment and other incidentals necessary for the supply of painting materials and the complete painting of surfaces as shown on the drawings in accordance with this Specification and as directed by the Project-In-Charged.

The term paint as hereinafter used includes emulsion paints, varnishes, oils, pigments, thinner and dryers.

All exposed metal surfaces, except metal surfaces embedded in concrete, shall be painted unless otherwise specified.

STANDARD

The following publications listed below, but referred to thereafter by basic designation only, forms a part of these Specifications to the extent indicated by the reference thereto:

Steel Structures Painting Council (SSPC) U.S. Specification JIS K 5628 Red-lead Zinc Chromate Anti-Corrosive Paint.

SUBMITTAL

1. The Contractor shall submit work method statements with lists of materials to the Project-In-Charged for approval twenty eight days before the starting of works. This statement shall include following items:

    a. Type of paint and manufacturer
    b. Manufacturer's specifications
    c. Storage and delivery of materials
    d. Surface preparation
    e. Finish painting and drying
    f. Touch-up painting, if any
    g. Equipment

2. The Contractor, before placing order for the painting materials, shall submit to the Project-In-Charged for approval samples of materials. No placing of orders for material shall be made without his approval.

STORAGE AND DELIVERY

1. The Contractor shall deliver all material to the site in the original labeled sealed cans and containers, with labels intact and seal unbroken.

    a. Seals shall remain unbroken until after inspection and acceptance of material by the Project-In-Charged.

b. The Contractor shall deliver materials in ample quantities sufficiently in advance of the need to avoid any delay or interruptions in the works.

2. Paint in thinner shall be stored in accordance with the approved manufacturer's instructions.

a. All regulations required for storage of paint shall be observed and all necessary safety signs required by governing codes shall be posted.

b. Any damage caused by failure to exercise proper precautions in paint storage shall be repaired.

MATERIAL REQUIREMENTS

PAINT

Paints for the protective coating system shall be the product of a manufacturer approved by the Project-In-Charged.

Paints for exterior finish must be with tile like durability and elegance, fast drying, solvent based acrylic, highly suitable for coastal or polluted areas with excellent anti-fungus properties and alkali resistance.

100% Acrylic, water based, quick-drying, easy to clean-up and environmentally friendly, resist dirt, stains, alkali, water, humidity, algae, mold and mildew growth and highly durable paint for interior finish.

An all-purpose synthetic quick dry paint for all types of wood and metal surfaces. It has high gloss, good color retention and outstanding durability.

For pipes, valves and equipment, galvanized and ungalvanized ferrous metal, use a 100% acrylic gloss paint, has excellent resistance to ultraviolet rays and resists chalking, cracking and color fading, dries fast and environmentally friendly.

SCHEDULE OF PAINTING

Architectural Items	
a. Exterior Finishes	
1. On Concrete Walls	
Three Coats, Concrete Masonry Paint	Elastomeric Paint or approved equal
2. Unprimed Ferrous Metal	
First Coat	Red Oxide Primer, #310 or approved equal
Second & Third Coat	Quick Dry Enamel or approved equal
3. On Concrete Block Wall	
Masonry Neutralizer	Masonry Neutralizer #44 or approved equal
Three Coats Concrete Masonry Paint	Elastomeric Paint or approved equal

4. On Wood	
First Coat Exterior Wood Primer	Flatwall Enamel or approved equal
Second & Third Coat Exterior enamel	Quick Drying Enamel or approved equal
b. Interior Finishes Location of the various finishes are listed in the Finish Schedule on the drawings or else will be confirmed by PPA	
1. On primer and coated metal two coats of interior semi-gloss enamel or as indicated in the Schedule finish	Red Oxide Primer #310, Quick Dry Enamel or approved equal
2. On Plaster	
First Coat	Masonry Neutralizer #44 or approved equal
Three Coats	Elastomeric Paint or approved equal
3. On Wood	
First Coat Enamel undercoater	Flatwall Enamel or approved equal
Second & Third Coat Exterior enamel	Quick Drying Enamel or approved equal
4. Wood Stain Finish	
First Coat Second & Third Coats Fourth & Fifth Coats	Oil Wood Stain , Lacquer Sanding Seale r#1254 Clear Gloss Lacquer #1250 or approved equal
c. Non – Architectural Items (Piping, valves, equipment, etc.)	
1. Piping, valves, equipment etc. in rooms are to be painted	
2. Galvanized pipes and ducts	
Primer – one coat Finish – one coat	Red Oxide Primer, #310 or approved equal Quick Dry Enamel or approved equal
3. Black steel pipes	
Primer – one coat Finish – one coat	Red Oxide Primer, #310 or approved equal Quick Dry Enamel or approved equal
4. Mechanical Items	
a. Ungalvanized ferrous metal Primer – one coat Finish – one coat	 Red Oxide Primer, #310 or approved equal Quick Dry Enamel or approved equal or approved equal

b. Galvanized ferrous metal Primer – one coat Finish – one coat	 Red Oxide Primer, #310 or approved equal Quick Dry Enamel or approved equal or approved equal
c. Submerged galvanized ferrous metal Primer – one coat	Red Oxide Primer, #310 or approved equal
d. Buried miscellaneous ferrous surface valves, & flanged joints (excl. pipe) Primer – one coat	Red Oxide Primer, #310 or approved equal

EXECUTION

SURFACE PREPARATION OF STEEL

1. Steel surfaces shall be cleaned as follows:

   a. All round welds, burrs and sharp surface projections shall be ground smooth and all weld splatter shall be removed prior to blast cleaning.

   b. Sand abrasives, if used, shall be clean, and free from salt and extraneous matter. The sand shall pass through a 2.0mm test sieve, and be substantially retained on a 0.18mm test sieve, with at least 25 percent retained on a 0.355mm test sieve.

   c. Metallic abrasive, if used, shall be sharp, hard and free from dust, and shall pass through a 1.8 mm test sieve.

   d. Blast cleaning operations shall not be conducted on surfaces that will be wet after blasting and before coating, or when the surfaces are less than 10°C above degree points, or when the relative humidity of the air is greater than 95 percent.

   e. Any oil, grease, soil, dust or other foreign matter deposited on the cleaned surfaces shall be removed prior to painting. In the event that rusting occurs after completion of the surface preparation, the surfaces shall be cleaned again in accordance with the specified method.

   f. Particular care shall be taken to prevent the contamination of other corrosive chemicals before the application of the paint. Such contamination shall be removed from the cleaned surface by flash blasting and the paint applied immediately.

   g. Care shall be taken to prevent contamination of cleaned and painted surfaces by cleaning operations in an adjacent area.

   h. Surfaces not to be painted shall be suitably protected from the effects of cleaning and painting operations.

SURFACE PREPARATION OF WOOD

1. Wood surfaces shall be sanded to a fresh surface. Surface mould where present, shall be removed by washing, rubbing down and burning off as necessary. Resinous exudation and large knots shall be removed and replaced with filler or other materials approved by the Project-In-Charged.

2. Parts of timber to be enclosed in walls shall always be primed unless already impregnated. Priming shall be brushed on and a minimum of two coats applied to end grain. When the priming paint is hard, all cracks, holds, open joints, etc. shall be made good with hard stopping and rubbed down with fine abrasive paper. Priming of joinery shall be applied only on site after the Project-In-Charged has approved such joinery and before it is fixed. For internal surfaces primer coats shall be carefully flatted.

SURFACE PREPARATION OF CONCRETE AND PLASTER

Concrete and cement plaster surfaces to be painted shall be prepared by removing efflorescence, dust, dirt, grease, oil, asphalt, tar, excessive mortar and mortar dropping and by roughening to remove glaze. A zinc sulfate solution shall be applied before prime cost.

SURFACE PREPARATION FOR FIBER CEMENT SURFACES

Shall be dry and clean prior to application of the specified first-coat material. Oil, grease, or rust stains shall be carefully removed by the use of suitable solvent. Wire brushing will not be permitted. After the first coat has become dry and prior to application of finish coats, touch-up coats shall be applied to suction spots.

ALUMINUM FRAMES FOR DOORS AND WINDOWS

All metal surfaces shall undergo pre-treatment process which includes: desmutting, water-rinsing, degreasing/etching, water rinsing, zinc phosphating, water rinsing and acid rinsing.

Powder coating application, shall be factory applied and shall be done in one operation using an electro-static powder gun. The materials to be coated should be well connected to earth. Coating thickness should be kept to a minimum of 60 microns for exposed areas. On details which are to be treated mechanically after coating (drilling, sawing, etc.), the coating film must not exceed 100 microns.

The powder coating shall be oven cured in the range of 20 minutes at 220° C (metal temperature measured on the area with greatest metal thickness). The temperature variation in the oven should not exceed +/- 10° C.

Handling

Coated items should be cooled to no less than 40° Centigrade before handling. Precautions should be taken to avoid damages on the finished coating during stacking, storing and transportation.

Storage and Delivery

Inspect materials delivered to the site for damage. Unload and store with minimum handling. Provide storage space in dry location with adequate ventilation, free from dust or water and easily accessible for inspection and handling. Store materials neatly on the floor, properly stacked on non-absorptive strips or wood platforms. Protect finished surfaces during shipping and handling using manufacturer's standard method.

WOOD REPAIR

Badly decayed areas shall be removed and repaired. Areas and pieces decayed beyond repair shall be replaced with new pieces that match originals in all respects. Moderately decayed areas, weathered, or gouged wood shall be patched with approved patching compounds, and shall be sanded smooth. The source or cause of wood decay shall be identified and corrected prior to application of patching materials. Wet wood shall be completely dried to a moisture content not exceeding 12 percent, as measured by a moisture meter, to its full depth before patching, unless otherwise authorized. Wood that is to be patched shall be clean of dust, grease, and loose paint.

1. Epoxy Wood Repair

   Epoxy wood repair materials shall be applied in accordance with manufacturer's written instructions. Health and safety instructions shall be followed in accordance with the manufacturer's instructions. Clean mixing equipment shall be used to avoid contamination. Mix and proportions shall be as directed by the manufacturer. Batches shall be only large enough to complete the specific job intended. Patching materials shall be completely cured before painting or reinstallation of patched pieces.

2. Epoxy Consolidant and Epoxy Paste

   Epoxy liquid wood consolidant shall be used:

   1. To penetrate and impregnate deteriorated wood sections in order to reinforce wood fibers that have become softened or absorbent.

   2. As a primer for areas that are to receive epoxy paste filler. Epoxy paste shall be used to fill areas where portions of wood are missing such as holes, cracks, gaps, gouges, and other voids.

MIXING AND THINNING

Mixing and thinning of paint shall be done in accordance with the approved manufacturer's printed instructions. The pot life of each paint as stated by the manufacturer shall not be exceeded.

WEATHER CONDITION

The paint shall not be applied when the relative humidity is above 85 percent. The paint shall not be applied in rain, wind, fog, dust or mist.

APPLICATION

Workmanship shall be first class in every respect. All work shall be done in a workmanship manner so that the finished surfaces shall be free from runs, chop, ridges, waves, laps and unnecessary brush marks. All coats shall be applied in such manner as to produce an even film of uniform thickness. Edges, corners, crevices, welds and rivets shall receive special attention to ensure that they receive an adequate thickness of paint.

All painting shall be done by thoroughly experienced workmen.

Safety regulations shall be adhered to at all times, including the wearing of respirators by persons engaged on assisting in spray painting. Adjacent areas and installation shall be protected by the use of cloths or other approved precautionary measures.

Plain enamel and varnish shall be applied carefully with good clean brushes or approved spraying equipment, except that the initial coat on any surface shall be applied with brush. Sufficient time shall be allowed between coats to assure thorough drying and each coat shall be in proper condition before receiving the next coat.

Sanding and dusting as required shall be performed between coats in varnishing work. Finish coat shall be smooth and free from runs, sags, and other defects. Exterior paint shall not be applied during rainy days.

All paint when applied shall provide a satisfactory film and smooth, even surface. Paint shall be thoroughly stirred and kept at a uniform consistency during application. Powdered metallic pigments added at the time of use shall be mixed by adding the powder in small increments to about one-third of the base paint or vehicle, with thorough mixing to obtain a smooth paste. The remainder of the base paint shall then be thoroughly stirred in.

Different brands of emulsion paints shall not be mixed prior to application of the materials.

Where necessary to suit conditions of surface temperature, weather and method of application, the package paint may be thinned immediately prior to application in accordance with the approved manufacturer's directions, but not in excess of 125 cc of suitable thinner per liter (one pint per gallon). Before using, the paint shall be mixed to a uniform consistency and shall be stirred frequently during application.

Paints other than water-thinned paints shall be applied only to surfaces which are completely free of moisture as determined by sight or touch and only such combinations of humidity to be painted as will cause evaporation rather than condensation.

Surfaces which have been cleaned, pretreated and/or otherwise been prepared for painting shall be primed or painted with one coat of finish paint as soon as practicable after such preparation has been completed, but in any event prior to any deterioration of the prepared surfaces.

The first coat of paint on all exterior surfaces shall be applied by brush. Interior prime coats and all other subsequent coats on either exterior or interior surfaces may be applied by brush or spray. Whenever spraying is permitted all areas inaccessible to spray painting shall be coated by brushing or other suitable means. Brushes to be used for application of water-emulsions shall be soaked in water for a period of 2 hours prior to use.

All cloths and cotton waste which might constitute a fire hazard shall be placed in closed metal containers or destroyed at the end of each day.

Upon completion of the work, all staging, scaffolding, and containers shall be removed from the site or destroyed in a manner approved by the Project-In-Charged. Paint spots, or stains upon adjacent surfaces shall be removed and the entire job left clean and acceptable to the Project-In-Charged.

No smoking shall be permitted in the vicinity where painting is going on.

TOUCH-UP PAINTING

Touch-up painting shall be done with the same paint as used for the original coat. The resulting minimum dry film shall be the same as for the original coat.

Touch-up painting shall include cleaning and painting of field connections, welds and all damaged or defective paint and rusted areas.

During touch-up painting, only loose, cracked, brittle or non-adherent paint shall be removed during cleaning. All exposed edges shall be feathered. Touch-up painting shall be performed in a manner which will minimize damage to sound paint. Rust spots shall be thoroughly cleaned and edges of the existing paint shall be scraped back to sound material.

DRYING

1. No primer or paint shall be forced to be dried under conditions which will cause cracking, wrinkling, blistering, formation of pores which would detrimentally affect the condition of the paint.

2. No drier shall be added to the paint unless specified in the approved manufacturer's instructions.

3. Painted surfaces shall be protected from dust, dirt, and the elements of the weather until dry to the fullest extent practicable.

4. After drying, any areas of paint damaged from any cause shall be removed, the surface again prepared and then touched-up with the same paint and to the same thickness as the undamaged areas as specified in sub-section 4.14.3.7 above.

HANDLING

1. Precautions shall be taken to minimize damage to paint films resulting from stacking for drying.

2. Paint which is damaged in handling shall be scraped off and touched-up with the same paint and in the same thickness as was previously applied to the damaged area at Contractor's expense.

INSPECTION

1. All works and materials supplied under this Specification shall be subject to inspection by the Project-In-Charged.

2. The Contractor shall correct such works or replace such materials found defective under these Specifications at his own expense.

ITEM 25 e : ALUMINUM COMPOSITE PANEL

I.INTRODUCTION

A. MATERIAL COMPOSITION

Aluminum Composite Panel (ACP) is a lightweight durable panel made of laminated aluminum and polyethylene core compound, coated with an advanced fluorocarbon paint Polyvinylidine Flouride (PVDF) to ensure the excellent durability of the surface finish. It is an excellent material for exterior and
Interior cladding of new building construction as well as retro fit applications. It also has a high degree of levelness top reserve the fine architectural design and can be roller bended to suit various design shapes. The laminated structure of ACP ensures exceptional strength of the panel.

THICKNESSES:
3mm (Polyester) 4 to 6mmPVDF/+Nano

B. CHARACTERISTICS

1. Flatness–as the composite material is rigid, the flat surface can be preserved. This is considered a major advantage of ACP.

2. Fire Resistance–ACP are laminated at
Temperatures from 200° to 250° to bond aluminum sheets to the polyethylene core. The non-flammable aluminum cover sheets protect the plastic core.

3. Light Weight–as the weight is less than ½ to ⅓
Of the weight of porcelain enamel, iron, copper, stainless and other metal panels, consequently it can reduce the weight of the building.

4. Durability–ACP is highly resistant to chemical corrosion due to the PVDF coating. The composite material is rigid, resistant to blows, breakage, and pressure and has high bending and breaking strength.

SPECIFICATION

I. Aluminum Composite Panel (ACP) must be composed of density polyethylene core sandwiched between two sheets of aluminum,

II. It must be strong, lightweight approximately 5.5kg/sqm. But must be exceptionally flat.

III. The ACP composition

- Two sheets of aluminum
- Front side aluminum roll coated with polyvinylidine fluoride PVDF according to AAMA605.2 requirements.

IV. PVDF coating finish adhere to the following standards.

Testing Item	Standard	Result
Finished coat thickness	ISO 2360 (CNS 8406)	27.6m
Gloss	ASTM D532-89	20 – 45 %
Pencil hardness	ASTM D3363-00	2H
Toughness	ASTM D4145-83	2T no rift
Adhesive force	ASTM 3359-97	4B
Impact resistance	ASTM D2794-93	>100 kg. cm.
Abrasion resistance	ASTM D968-93	64.6 L/mil
Mortar resistance	ASTM 605.2-90	24 Hrs. pat test exceed
Himidity resistance	ASTM D714-97	3000 hr no blister
	ASTM D2247-02	
Boiling- water resistance	ASTM D3359-B	Passed
Salt-spray resistance	ASTM D117-03	3000 hr no blister
Acid resistance	ASTM D1308-87	No effect
	AAMA 605.2-91, TEST #7, 7.31	
Alkali resistance	ASTM D1308-87	Passed
Solvent resistance	ASTM D2248-73	Passed
	ECCAT T5 & NCCA No. 11-18	
Color retention	ASTM D2244-93	ΔE = 0.34
Chalk resistance	ASTM D4214-98	No chalking
Gloss retantion	ASTM D2244-93	84.2 %

V. Total thickness must be 4.0mm minimum (standard)

VI. Framing must also be made of aluminum to prevent corrosion of the panels.

VII. Aluminum Composite panel supplier must be the same company that will install the framing and will fabricate and install all panels. This is to insure optimum workmanship. All labor and installation must have a warranty of not less than one year.

Methodology

II.SUBMITTALS

A. PRODUCT DATA

Manufacturer's printed product literature, specifications, and data sheets

B. SHOP DRAWINGS

1.Indicate project layout and elevations; dimensions and thickness of panels; connections; details and locations of joints and sealant; methods of anchorage; number of anchors; supports; reinforcement; flashings; accessories; materials; and finishes.

2. Indicate proposed joints details providing watertight and structurally sound panel system that allows no uncontrolled water penetration on inside face of panel system as determined by ASTME331.

C. SAMPLES

1. Sample of panel system materials for selection
and verification of finishes, colors, and sealant colors.

2. Sample of panel assembly.

D. TEST REPORTS (as requested)

Certified test reports for ACP from approved independent testing laboratories indicating compliance with specifications for specified performance, characteristics, and physical properties.

III. QUALITY ASSURANCE

A. Fabricator / installer to be accepted by the manufacturer.

B. Fabricator / installer to have work similar in scope and size to this project.

C. Take field measurements prior to completion of shop fabrication. Coordinate fabrication schedule with construction progress to avoid delay of work. Field fabrication should be allowed to ensure proper fit and keep it to minimum with majority of fabrication being done under controlled shop conditions.

D. Maximum deviation from vertical and horizontal alignment of erected panels should be made.

E. Assume responsibility for components of exterior panel system including, but not limited to, attachment to sub-construction, panel-to-panel joinery, panel-to-dissimilar-material joinery, and joint seal associated with panel system.

IV. DELIVERY, STORAGE, and HANDLING

A. Cover exposed surfaces with pressure-sensitive heavy protection paper or apply strippable plastic coating, before shipping to the job site.

B. Leave protective covering in place until final cleaning of building.

C. Deliver materials in (manufacturer's) original sealed packaging.

D. Store panels and accessories in a dry, secure location and protect from weather.
E. Protect finish and edges of panel.

V. LOADING AND UNLOADING

A. Panels must be handled carefully to prevent damage
B. Panels may buckle if they are not properly supported.
C. A forklift may be used for panels up to 10 feet (3 meters) long. However, some means of supporting the panel load over a longer distance from the forks may be used.

VI. PREPARATION

Ensure surfaces to receive panels are structurally sound, even, smooth, clean, dry, and free from defects detrimental to work. Notify consultant thru writing of conditions unfavorable to proper and timely completion of work. Do not proceed with erection until unsatisfactory conditions have been corrected.

VII. ACCESSORIES

A. Extrusions, formed members, sheet, and plate are in accordance with ASTMB209 and recommendations of Manufacturer's

B. Panel stiffeners are structurally fastened or restrained at ends and secured to rear face of ACP with double-sided tape of sufficient size and strength to maintain panel flatness.

C. Sealant within panel system to conform with Manufacturer's standards to meet performance requirements.

D. Fasteners are not exposed except where unavoidable.

Aluminum Composite Panel Color / Thickness/ Location

Concrete Canopy	-	4mm thick ACP (As Selected by the Architect)
Parapet Wall	-	4mm thick ACP (As Selected by the Architect)
Exposed Columns		4mm thick ACP (As Selected by the Architect)

Details are shown in the plans.

ITEMS 25 f: STEEL DECKS

GENERAL

General Requirements contain provisions and requirements essential to these Specifications; and apply to this section, whether or not referred to herein.

SCOPE OF WORK

The work covered by this section consist of furnishing all labor, materials, equipment, tools and incidentals necessary to undertake, complete the installation of steel deck as indicated on the drawings and as specified herein.

PRODUCTS

- Materials Provide products of a manufacturer that is regularly engaged in production of steel deck units and accessories.

  - Steel Decks:

Base Metal Type :	ASTM A466 cold – rolled 550 mpa (80,000 psi)
Thickness :	0.80mm X 0.90 m
Coating :	Imported Coil – Zinc – 275 gms/ m^2 Local Coil - Zinc – 120 to 150 gms/ m^2
Length :	Transportable

SUBMITTALS

1. Manufacturer's catalog data for steel deck and accessories. Include decking design calculations, or applicable published literature covering the specific type of construction required by this project.

2. Manufacturer's certification that design of steel decks meets the requirements of the local standards.

3. Shop drawing large-scale, cross-sectional detail of decking, various connections, and bearing on supports, methods of welding, attachment of accessories, adjusting plate details, floor layouts, placement directions, structural properties including composite section properties, and other pertinent details.

4. Samples:

   - Approximately one-square foot of steel deck
   - Accessories, one of each type
   - End closures, one of each type
   - Adjusting plates, one of each type
   - Mechanical deck fastener (if used), one of each type

4. Welder Certification:

Including a report of welder qualification procedure. Provide qualification of welders and duration of qualification period in accordance with AWS

5. Delivery and Storage

Do not damage or overload decking and accessories during delivery, storage, or handling. Do not use decking for storage or as a working platform until units have been welded into position. Stack decking on platforms or pallets and cover with weather-tight ventilated covering. Elevate one end during storage to provide for drainage.

EXECUTION

1. Inspection prior to installation of decking units and accessories, inspect work-site to verify that the as-built structure will permit the indicated field installation of decking system without modification.

2. Installation

Install steel deck units in accordance with approved shop drawings. Place units on structural supports, properly adjusted, leveled, and aligned at right angles to supports. Report inaccuracies in alignment or leveling to the Project- In- Charged and make necessary corrections before deck units are permanently anchored. Locate end laps over supports only, with minimum lap of 50 mm. Do not use unanchored deck units as a work or storage platform. Permanently anchor all units placed by the end of each working day.

3. Anchorage Methods

After placement and alignment, and after inaccuracies have been corrected, permanently fasten steel deck units in place by welding, or with self-drilling screws or powder-actuated fasteners. Use methods as recommended by the Steel Deck Institute, subject to approval. Length of side and end laps of deck and intervals of fastening shall be as recommended by the steel deck manufacturer. Clamp or weight deck units to provide firm contact between deck units and structural supports while welding of fastening is being performed.

- Welding

Perform welding in accordance with AWS D1.3 using methods and electrodes recommended by the manufacturers of the base metal alloys being used. Only operators previously qualified by test prescribed in AWS D1.3 to perform the type of work required shall make Welds. Location, size and spacing of welds shall be in accordance with the Steel Deck Institute recommendations and as shown on the shop drawings. Clean welds immediately by chipping and wire brushing.

- Fasteners: Provide powder actuated or screwed fasteners for anchoring the deck to structural supports and adjoining units. Provide positive locking-type fasteners standard with the Steel Deck Institute and the manufacturer, as approved by the Project-In-Charged.

- Openings: Reinforce decks or frames openings as necessary for rigidity and load carrying capacity. Neatly cut or drill holes or other openings required for work of other trades. The deck manufacturer shall approve holes or openings larger than 150 mm in diameter prior to drilling or cutting.

- Accessories

  a. Adjusting Plates: Provide in locations too narrow to accommodate full-size deck units and install as shown on shops drawings.

  b. End Closures: Provide end closure to close open ends of cells at columns, walls, and openings in deck.

  c. Cover Plates: Provide metal cover plates, or joint tape, at joints between decking sheets, cellular or non-cellular, to be covered with concrete fill where concrete leakage would be a problem.

  d. Column Flashing: Provide for spaces between floor decking and columns, which penetrate the deck. Field cut flashing to fit column in the field and tack weld to decking and columns.

  e. Hangers: Provide as indicated to support utility system and suspended ceilings. Space devices as indicated.

- Concrete Work

Prior to placement of concrete, inspect the installed decking to ensure that there has been no permanent deflection or other damage to the decking. Decking which has been damaged or permanently deflected shall be replaced as approved by the Project-In-Charged. Concrete fill over metal deck is specified in Section entitled, "Cast-In-Place Concrete."

- Propping

Provide props in accordance with manufacturer's recommendation. Propping shall consist of substantial timber or steel members supported by a line of props adjusted to prevent settlement during concrete placement and curing. Propping must be designed to support weight of wet concrete plus a temporary construction load. Propping may be erected before or after installation of the decking and shall be left in place until the concrete has reached sufficient strength of at least 70% of its design strength.

- Exposed Soffit Used as Ceiling

Provide propping as shown on table below:

0.80 MM THICK DECKING

Slab Thickness	1.50-2.0	2.01-3.5	3.51-4.5	4.51-6.0
	No. of Props	No. of Props	No. of Props	No. of Props
90-120	1	2	2	3
121-150	2	2	2	3
151-180	2	2	2	3

Low density fibre board or similar materials shall be placed between the props and decking panels to reduce effect of unsightly propping lines. Pouring shall be done parallel to the panels.

ITEM 25 g : HANDRAILS, RAILINGS AND GUARDRAILS

GENERAL

General Requirements contain provisions and requirements essential to these Specifications; and apply to this section, whether or not referred to herein.

SCOPE OF WORK

The work covered by this section consist of furnishing all labor, materials, equipment, tools and incidentals necessary to undertake, complete the installation of handrails, railings and guardrails as indicated on the drawings and as specified herein.

SUBMITTAL

1. Manufacturer's technical data for products and processed used in handrails, railing, guardrails system, including finishes and grout.

2. Shop Drawings showing details of fabrication and installation for each type and of handrail, railing, and guardrails required including plans, elevations, sections, profiles of rails, fittings, connections, and anchors.

3. Prepare samples of each type of metal handrails & railings stainless steel hairline finish. Where finish involves normal color and texture variations, include sample sets composed of two or more units showing limits of such variations expected in completed works.

- Include 6" long samples of each distinctly different railing member including guardrails, handrails, top rails, posts, and balusters. Include samples of fittingsand brackets if requested by Architect.

- Include sample of typical welded connection.

QUALITY ASSURANCE

Single Source Responsibility

Obtain handrails, guardrail and railing systems of each type and material from a single manufacturer.

STORAGE

Store handrails, guardrail and railing systems in clean, dry location, away from uncured concrete and masonry, protected against damage of any kind. Cover with waterproof paper, tarpaulin, or polyethylene sheeting; allow for air circulation inside the covering.

FABRICATION

General

Fabricate handrails and railing systems to design, dimensions and details shown. Provide handrail and railing members in sizes and profiles indicated, with supporting posts and brackets or size and spacing shown, but not less than required to comply with
requirements indicated for structural performance.

Shop Assembly

Pre-assembled items in shop to greatest extent possible to minimize field splicing and assembly. Disassemble units only as necessary for shipping and handling limitations. Clearly mark units for reassembly and coordinated installation.

Welded Connections

Fabricate handrails, guardrail and railing systems of materials for interconnections of members of welding. Use welding method, which is appropriate for metal and finish, indicated and develops strength required to comply with structural performance criteria. Finish exposed welds and surfaces smooth, flush, and blended to match adjoining surfaces.

Form changes in direction of railing members by bending members by metering, or as indicated on the drawing, as approved by the Architect.

Furnish inserts and other anchorage devices for connecting handrails, guardrail and railing systems to concrete or masonry work. Fabricate anchorage devices, which are capable of withstanding loading imposed by handrails, guardrails and railing systems.

Coordinate anchorage devices with supporting structure.

a. For railing, and guardrail posts set in concrete provide pre-chiseled openings and insert posts as indicated on drawings. Fill opening with non-shrink, non-metallic grout.

MATERIALS

General

Comply with standards indicated for forms and types of metals indicated or required for handrail and railing system components.

a. Stair Railings:

As indicated on plans.

b. Stair Handrail:

As indicated on plans.

c. Guardrail

As indicated on plans.

Refer to plans for the required dimension of various types of stainless steel railings and location.

Fastenings: commercial types, except where special types are shown or required.

Fastenings for all exterior work shall be non-ferrous, unless otherwise shown. Fastenings for steel and aluminum and for all other interior work, where exposed, shall match the fastened metal.

Miscellaneous materials or accessories not listed above shall be provided

as specified hereinafter the various items of work and/or indicated on the drawings, or in accordance with manufacturer's specifications.

Execution

PREPARATION

Ensure surfaces to receive panels are structurally sound, even, smooth, clean, dry, and free from defects detrimental to work.

INSTALLATION

a. Safety precaution and procedure shall be observed in determining the sizes and in providing the required clearances by measuring the actual opening to receive the glass.

b. Secure glass with stainless steel brackets.

METAL FINISHES

Comply with NAAMM "Metal Finishes Manual" for recommendations and designations of finishes, except as otherwise indicated.

EXECUTION

PREPARATION

a. Coordinate setting drawings, diagrams, templates, instructions, and directions for installation of anchorages, such as sleeves, concrete inserts, anchor bolts, and miscellaneous items having integral anchors, which are to be embedded in concrete and masonry construction. Coordinate delivery of such items to project site.

b. Field Measurements
Take field measurements prior to fabrication.

INSTALLATION

GENERAL

a. Fit exposed connections accurately together to form tight, hairline joints.

b. Perform cutting, drilling, and fitting required for installation of handrails, guardrail and railing systems. Set work accurately in location, alignment, and elevation, plumb, level, true, and free of rack, measured from established lines and levels.

c. Field Welding

Comply with applicable AWS specification for procedures of manual shielded metal-arc welding, for appearance and quality of welds made, and for methods used in correcting welding work. Weld connections that are not to be left as exposed joints, but cannot be shop welded because of shipping size limitations. Grind exposed welded joints smooth and restore finish to match finish of adjacent rail surfaces.

d. Prior to anchoring, adjust handrails and railing systems to ensure matching alignment at abutting joints. Space posts at interval indicated but not less than that required by design loading.

ANCHORING POSTS

a. Concrete-Anchored Posts: Provide chiseled opening on concrete base as indicated on the drawings to receive railing posts and required anchoring system, holes of all loose material, insert posts, and fill annular space between post and concrete with non-shrink, non-metallic epoxy grout, mixed and placed to comply with grout manufacturer's directions.

RAILING CONNECTIONS

a. Welded Connections: Use fully welded joints for permanently connecting railing components by welding. Cope or butt components to provide 100 percent contact or use manufacturer's standard fittings designed for this purpose.

ANCHORING RAILING ENDS

a. Anchor railing ends to metal surfaces with manufacturer's standard fittings using concealed fasteners, unless otherwise indicated.

b. Anchor Railing Ends to Concrete or Masonry, use drilled-in expansion shields and concealed hanger bolts, unless otherwise indicated.

PROTECTION

a. Protect finishes of railing, handrails and guardrails system from damage during construction period by use of temporary protective coverings approved by railing manufacturer. Remove protective covering at time of Substantial Completion.

b. Restore finishes damaged during installation and construction period so that no evidence remains of correction work. Return items which cannot be refinished in the field to the shop; make required alterations and refinish entire unit, or provide new units as required.

ITEM 25 h : SUPPLY AND INSTALL OF VARIOUS TYPES OF FURNITURE INCLUDING ACCESSORIES

GENERAL

General Requirements contain provisions and requirements essential to these Specifications; and apply to this section, whether or not referred to herein.

SCOPE OF WORK

The work covered by this section consist of furnishing all labor, materials, equipment, tools and incidentals necessary to undertake, complete supply of gang chairs for the buildings as indicated on the drawings and as specified herein.

ITEM	*Unit*	*Quantity*
L-shaped Executive table (1800mm x 800mm x 750mm High with one (1) Executive Chair and Two (2) Visitors' Chairs or Equivalent	set	3.00
Working Table (1200mm x 600mm x 750mm high) with Laminated Partition (1100mm high) and one (1) Mid-back Office Chair (each table) or equivalent	Set	8.00
Wall Mounted Table (1800mm x 500mm x 750mm high) with Wall Mounted table (1950mm x 300mm x 750mm high) and Two (02) Mid-back Office Chair or Equivalent	set	1.00
Visitor's Chair	set	3.00
Kitchen Sink with Faucet	set	3.00
Pantry Counter	Lot	1.00
Kitchen Counter @ Common Area	Lot	7.00
Kitchen Counter @ Manager's Quarters	Lot	1.00
Closet (1.20 Meters length)	set	4.00
Queen Sized Bed	set	1.00
Full Sized Bed	set	2.00

Bunk Bed	set	6.00
2- Seater Sofa	set	1.00
1- Seater Sofa	set	1.00
600mm X 600mm Side Table	set	2.00

SUBMITTAL

1. Shop drawings for all gang chair for the building shall be submitted in advance to allow twenty-eight days for review and approval. Shop drawings shall indicate materials and details of finishing works. The Contractor shall be responsible for all errors of detailing and fabrication, and for the correct finishing work items shown on the shop drawings.

2. The Contractor, before placing order for the supply shall submit to the Engineer for approval representative samples of finishing materials. No placing of orders for material for finishing works shall be made without his approval.

EXECUTION

All materials will be delivered and installed (if needed to be installed) on site.

ITEM 25 I : CONCRETE WATERPROOFING

GENERAL

General Requirements contain provisions and requirements essential to these specifications and apply to this Section, whether or not referred to herein.

SCOPE OF WORK

The work shall cover the waterproofing requirements for building as shown on the drawings.

The work shall consist of furnishing all labor, materials, equipment and other incidentals necessary for the integral waterproofing works where required as shown on the drawings and in accordance with the requirements of these specifications as directed by the Project - In -Charged.

SUBMITTAL

1. Material description and physical properties, application details, and recommendations regarding shelf life, application procedures, and precautions on flammability and toxicity.

2. Samples for each waterproofing type.

DELIVERY AND STORAGE

Deliver manufactured waterproofing materials in manufacturer's original, unopened containers, with labels intact and legible. Containers of materials covered by referenced specification number shall bear the specification number, type, and class of the contents. Store and protect materials in accordance with the manufacturer's instructions, and use within their indicated shelf life. Promptly remove from the site materials or incomplete work adversely affected by exposure to moisture. Use pallets and canvas tarpaulins to cover stored materials top to bottom.

PRODUCTS

I. DEEP PENETRATING SEALER

Deep Penetrating Sealer (DPS) is an environmentally friendly, non-toxic, odorless, clear, water-soluble liquid compound, which is safe and easy to use.

Deep Penetrating Sealer (DPS) penetrates below the surface and chemically reacts with the alkali and lime found in concrete. This reaction creates a silica gel membrane within the pores and capillaries of the concrete, permanently sealing it against the ingress of moisture yet allowing the concrete to breathe. Over a period of time, the silica gel membrane hydrates and

solidifies into a crystalline structure, increasing the hardness and strength of both new and old concrete while reducing moisture vapor emissions and permanently stopping the penetration and flow of water and water-borne contaminants such as chlorides and acids, both on the positive or negative side forging a waterproofed and preserved concrete structure.

EXECUTION

- All existing dirt and other surface contaminants adhering on the surface must be thoroughly removed. Apply Concrete Neutralizer using sufficient coats to completely neutralize the surface. Do not wash off. When sufficiently dry, dust lightly to remove crystalline deposits.

- Mix thoroughly the product mixture as per manufacturer's instruction. Any change from the recommended proportion will affect its quality. Scrape the bottoms, sides and corners of the container to ensure complete and full blending. Prepare only enough quantities that can be used within the pot-life period. Do not delay application. Apply DPS by brush or roller or by using an airless spray.

- Allow to cure overnight prior to application of topcoat.

II. FLEXIBLE MODIFIED CEMENTITIOUS

Flexible Modified Cementitious (FMC) is a two-component latex modified cementitious coating. It can be simply achieved by mixing the pre-packed dry-mixing powder with the formulated flexible latex admixture, and subsequent brushing the slurry on various substrates. It protects a wide range of buildings and structural concrete components with excellent resistance to water, aggressive chemicals, long-term weathering, and scratching. It is applicable for those structures subjected to long-term water immersion.

1. Free surfaces from dirt or foreign materials. For the waterproofing to work best, manufacturers recommend the surfaces be sand blasted, bush-hammered or acid-etched.

2. Apply 2 coats of the cementitious waterproofing. The first coat could include the manufacturer's materials only. The second coating will include a cement-sand mixture and also have chemical and metallic elements too. If supplementary waterproofing is required, then a third coat may be required. This typically includes sand and cement for that extra protection.

Methods of Application

Trowel

Application of the coating is done using the handheld trowel, by simply applying and spreading the coating using the trowel.

Spray

This method uses spraying equipment like the ones used in painting vehicles.
It is preferred due to its precise finish and efficiency. It is also faster to use the spray than the trowel method.

Brush

Use a typical brush similar to roll brushes that are used in painting houses. It also has a uniform finish and is faster to use compared to the trowel.

It is good to note that different surfaces will dictate the method of application.

ITEM 25 j : FACILITIES AND DEVICE FOR PERSONS WITH DISABILITY

SCOPE OF WORK

The work shall consist of furnishing materials, tools, labor and incidentals necessary for the construction/installation of facilities and device for disabled persons as shown on the Drawings and in accordance with the Implementing Rules and Regulations of Batas Pambansa Bilang 344 and this Specification.

MATERIAL REQUIREMENTS

GRAPHIC SIGNS

Graphic signs like the International Symbol of Access shall be fabricated from plastic materials, white color with either dark blue background. Letters and symbols shall be laminated and raised from the background.

HANDRAILS

Handrail for ramp shall be 50mmØ tubular stainless steel buff finished. It shall be provided with a small hole as of a Braille system.

GRABRAIL

Grab rail shall be manufactured from gauge 18 tubular stainless steel 25mmØ and provided with safety grip finish.

CONCRETE MATERIALS FOR RAMPS

1. Portland cement shall conform with the requirement of "Reinforced Concrete".
2. Aggregates shall conform with the requirements of "Reinforced Concrete".
3. Temperature bars shall have diameter of 10mm conforming with the requirements of "Concrete Works".

EXECUTION

GRAPHIC SIGNS

1. Directional and information signs, indicating the location of the ramp for physically handicapped persons, shall be installed / placed at the front of the main entrance of the Building. The signed board size and dimensions shall be based on DOTr approved Standard Design, schedule 40, sign post and the text and arrow shall be in accordance with the International Symbol of Access "B". Manual (See attached drawings and tabulation).
2. Signs shall be placed at the entrance and exits of the ramps and toilets, installed at conspicuous locations. The signboards shall be based on DOTr approved Standard Design Manual (See attached drawings and tabulation).

RAMP

The ramp shall be constructed as shown on the drawings and with a nonskid surface and tactile strips.

Item 25 k : SUPPLY AND INSTALL OF PHOTOLUMINESCENT SIGNS AND MARKINGS

GENERAL

General Requirements contain provisions and requirements essential to these Specifications; and apply to this section, whether or not referred to herein.

SCOPE OF WORK

The work covered by this section consist of furnishing all labor, materials, equipment, tools and incidentals necessary to undertake, complete supply and install of photoluminescent signs and markers for the buildings as indicated on the drawings and as specified herein.

PHOTOLUMINESCENT SIGNS AND PATH MARKERS

Signs and markers are designed to be used in and about buildings to identify and ensure visibility escape routes for compliance with the performance based on Codes (Building & Fire Codes). The signs will be clearly visible and readily understandable under all conditions of foreseeable use, including emergency conditions.

SUBMITTAL

1. Shop drawings shall be submitted in advance to allow twenty eight days for review and approval. Shop drawings shall indicate materials and details of finishing works. The Contractor shall be responsible for all errors of detailing and fabrication, and for the correct finishing work items shown on the shop drawings.

2. The Contractor, before placing order for the finishing materials shall submit to the Project- In - Charged for approval representative samples of finishing materials. No placing of orders for material for finishing works shall be made without approval.

MATERIALS

Running Man Arrow Up/Left/Right
Pictogram (392mm X 223mm)

Bracket: Ceiling Mount (420mm X 230mm)

Bracket: Flag Mount (230mm X 133mm)

Double Sided Pictogram Directional (392mm X 223mm) /(480mm X 280mm)

Fire Extinguisher Sign

Fire Hose Sign

Fire Alarm Sign

Break Glass Sign

Evacuation Map

Path Markers

Guidance Strip

Handrail Strip

Step Edging
Exit Down Stairs

EXECUTION

INSTALLATION

For versatility the signs and markers can be installed using fixers (screws) or adhesive tape.

The installation method used should be determined by the condition of installation surface screws should be used if there is any doubt about adhesion.

ITEM 25 I : SIGNAGES AND LOGO

SCOPE OF WORK

Furnish materials and perform labor to include miscellaneous works required for the installation of room identification for the toilets and port office.

SAMPLE AND SHOP DRAWINGS

The Contractor shall submit samples for approval by the Architect. Notify the Architect for any changes, clarifications and discrepancies.
For the room I.D. full size lettering layout and installation method shall be submitted to the Architect for approval before start of work.

MATERIAL REQUIREMENTS

1. PPA LOGO

   - Hot dipped Built-up letters 4.5 mm thick Metal sheet screwed at the back.
   - 12.5mm thk. Colored Acrylic Plastic Sheet for PPA Logo
   - 1mm thk. Acrylic Painted G.I. Metal Sheet Free Standing Lettering

2. ROOM MARKERS

   Black acrylic letters, 38mm (1-1/2") high on white acrylic background, 63mm (2-1/2") high, with clear acrylic cover. Lengths shall be as required by the full notation therein.

EXECUTION

WORKMANSHIP

Workmanship shall be executed in high quality comparable with artworks.

MOUNTING

For all mounted assemblies, appropriate mounting hardware and connectors which are concealed shall be sufficiently used.

Assemblies shall be mounted plumb, straight, level, and at prescribed heights.

INSTALLATION

Installation shall be done in a secure and permanent manner at prescribed heights and/or layout. The backwall shall not be mutilated. After the dowels are positioned, fill with expanding grout, or other approved fillers, and retouch, flashed to the backwall surface.

ITEM 26 : PROJECT BILLBOARD

SPECIFICATION

The Project Billboard shall be installed at location(s) designated by the Engineer.

The size and specifications of materials for the standard billboard shall be 4ft. x 8ft. (1,200mm x 2,400mm) using ½ inch (12mm) marine plywood or tarpaulin poster on 3/16 inch (5mm) marine plywood.

Project billboards shall not contain Name(s) and/or picture(s) of any personages.

See attached drawings for further details of the standard billboard.

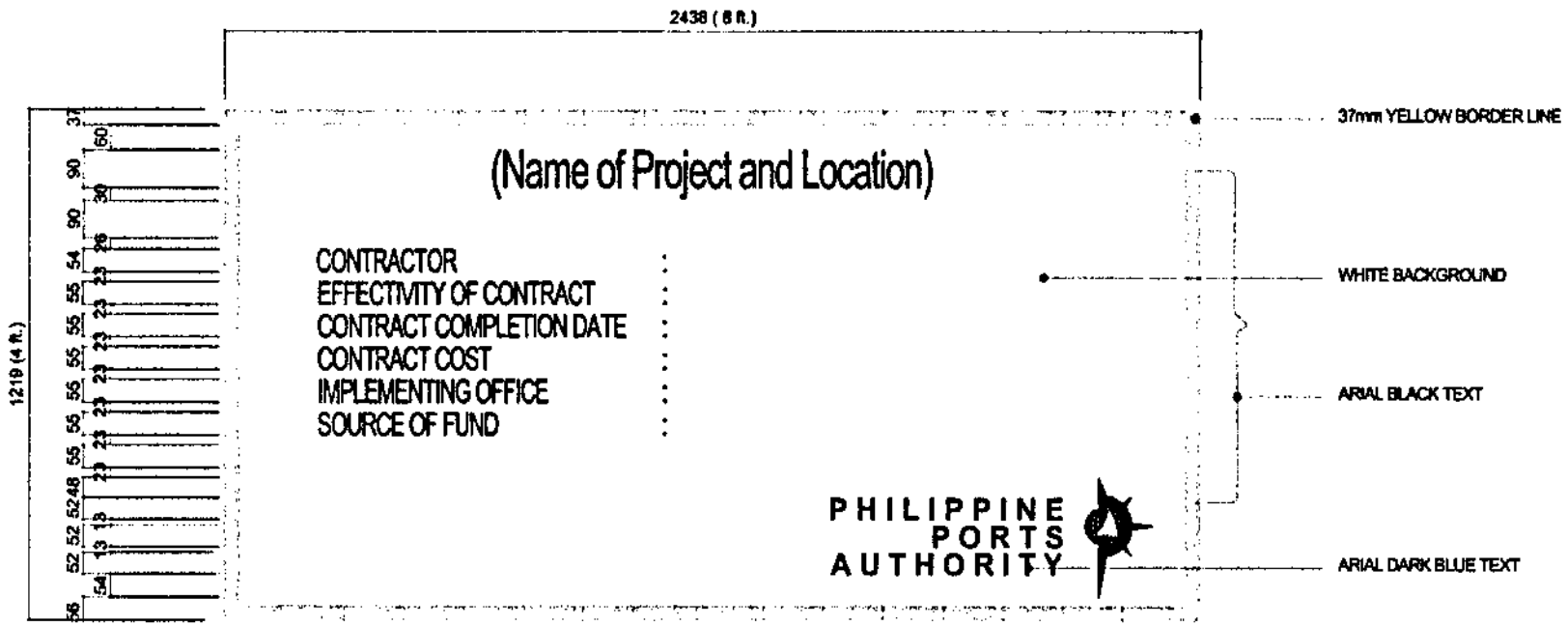

STANDARD PROJECT BILLBOARD

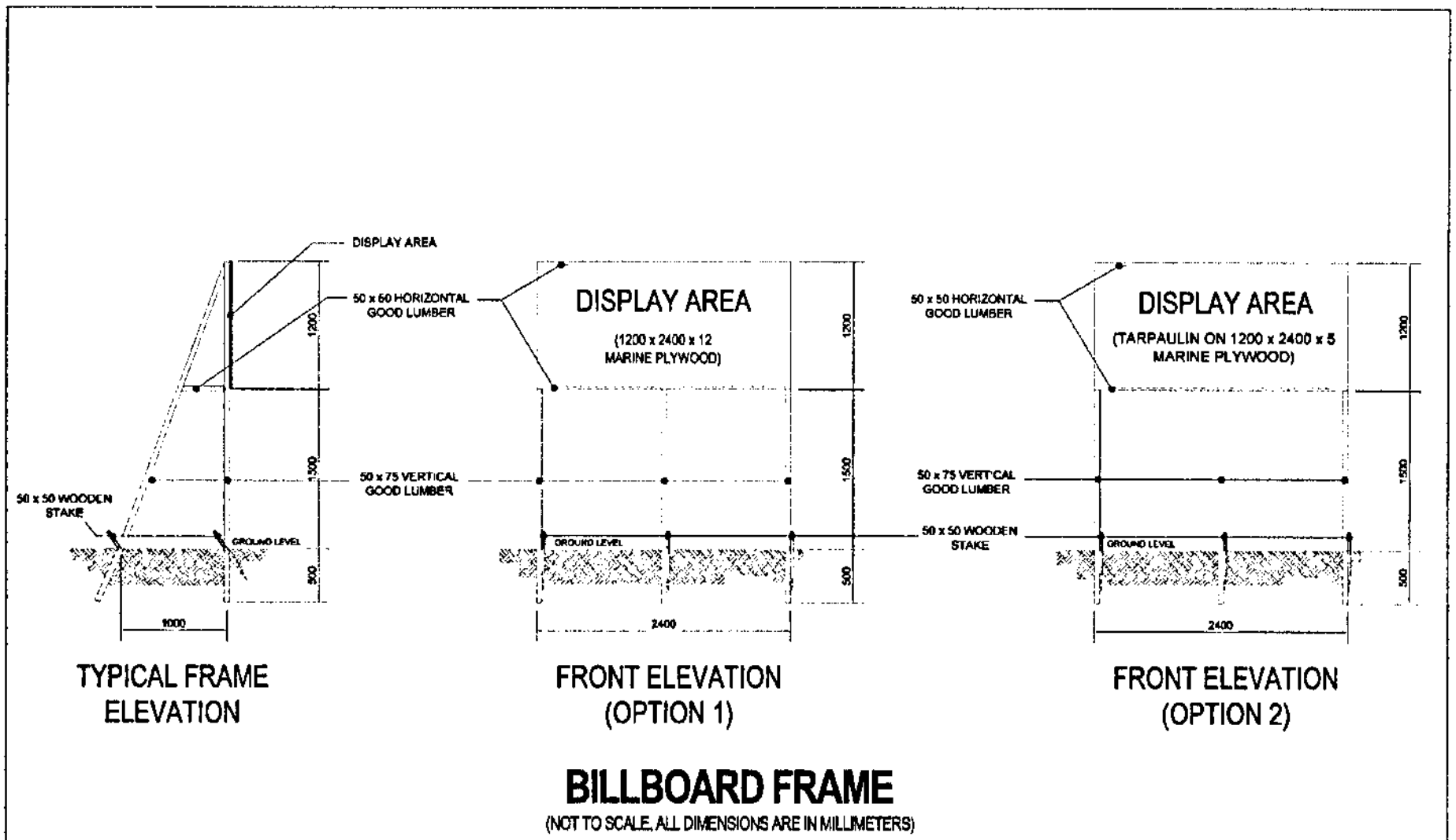

BILLBOARD FRAME

(NOT TO SCALE, ALL DIMENSIONS ARE IN MILLIMETERS)

ITEM 27 : SAFETY SIGNAGES AND BARRICADES

DESCRIPTION

This work includes the furnishing and installing of safety signages and barricades in accordance with the specifications and to the details shown below in the drawings, or as directed by the Engineer.

SPECIFICATION

The Signage's and Barricades shall be installed at location(s) designated by the Engineer.

The sizes of the standard signages shall be 2-2/3ft x 4ft (800mm X 1,200mm) for fixed type and 2ft x 2–2/3ft (600mm x 800mm) for mobile type. For barricade standard 2ft x 2–2/3ft (600mm x 800mm) shall be provided.

The materials to be used for signages and barricades are ½ inch (12mm) marine plywood or tarpaulin poster on 2" x 2" (50mm x 50mm) good lumber frame (see drawing below).

The printing or painting shall be the discretion of the Engineer.

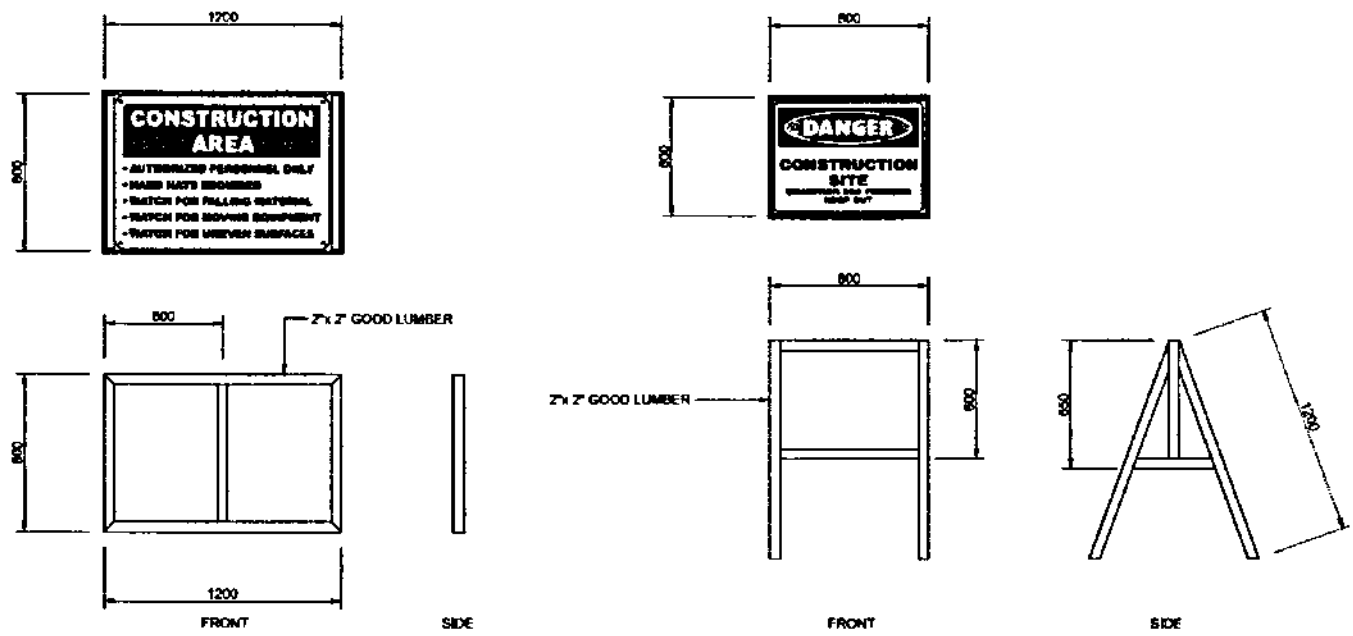

STANDARD PLAN FOR SIGNAGES AND BARRICADES

SECTION VII

DRAWINGS
(APPROVED PLANS)

SECTION VII

DRAWINGS AND APPROVED PLANS
(SEE ISSUED APPROVED PLANS)

LIST OF DRAWINGS:

ARCHITECTURAL

A - 01 of 13	• PERSPECTIVE • VICINITY MAP	• TABLE OF CONTENTS
A - 02 of 13	• SITE DEVELOPMENT PLAN	
A - 03 of 13	• GROUND FLOOR PLAN • SECOND FLOOR PLAN • ROOF DECK PLAN	• FIRE EXIT STAIRCASE ROOF DECK • FURNITURE LEGEND • LEGEND
A - 04 of 13	• FRONT ELEVATION • RIGHT SIDE ELEVATION • LEFT SIDE ELEVATION	• REAR ELEVATION • SECTION THRU A-A' • SECTION THRU B-B'
A - 05 of 13	• GROUND FLOOR REFLECTED CEILING PLAN • SECOND FLOOR REFLECTED CEILING PLAN • ROOF DECK REFLECTED CEILING PLAN	• ROLLER BLINDS PELMET DETAIL • LEGEND
A - 06 of 13	• GROUND FLOOR WALL PARTITION LAYOUT PLAN • SECOND FLOOR WALL PARTITION LAYOUT PLAN • ROOF DECK WALL PARTITION LAYOUT PLAN • FIRE EXIT STAIRCASE ROOF DECK WALL PARTITION LAYOUT PLAN • DRYWALL PARTITION DETAILS • LEGEND	
A - 07 of 13	• SCHEDULE OF DOORS, WINDOWS, AND GLASS PARTITION	
A - 08 of 13	• SCHEDULE OF DOORS, WINDOWS, AND GLASS PARTITION • BLOW-UP DETAILS OF MALE TOILET • BLOW-UP DETAILS OF FEMALE TOILET	
A - 09 of 13	• BLOW-UP DETAILS OF PWD TOILET • BLOW-UP DETAILS OF QUARTERS 1 TOILET & BATH • BLOW-UP DETAILS OF QUARTERS 2 TOILET & BATH	
A - 10 of 13	• BLOW-UP DETAILS OF MANAGER'S QUARTERS TOILET & BATH • BLOW-UP DETAILS OF GUEST ROOM TOILET & BATH	• FLIP-UP BAR DETAILS (TYPICAL) • GRAB BAR DETAIL • MIRROR DETAILS (TYPICAL)
A - 11 of 13	• BLOW-UP DETAILS OF PANTRY COUNTER • BLOW-UP DETAILS OF KITCHEN COUNTER @ COMMON AREA • BLOW-UP DETAILS OF KITCHEN COUNTER @ MANAGER'S QUARTERS	
A - 12 of 13	• STAIR BLOW-UP PLANS • RAMP BLOW-UP DETAILS • HANDRAIL CONNECTION 1	
A - 13 of 13	• FRONT FACADE BAY SECTION • REAR FACADE BAY SECTION • PPA LOGO DETAIL	• TMO SIGNAGE DETAIL

STRUCTURAL

S - 01 of 10	• GENERAL NOTES & STANDARDS
S - 02 of 10	• STANDARD DETAILS
S - 03 of 10	• DEMOLITION LAY-OUT PLAN • PAVEMENT LAY-OUT PLAN • ICBP TYP. CROSS-SECTION • ICBP TYP. DETAIL • DETAIL OF SHEAR KEY • RCW-1 DETAIL
S - 04 of 10	• PILE LAY-OUT PLAN • PILE CAP & COLUMN LAY-OUT PLAN • WALL FOOTING & SOG PLAN • PILE SCHEDULE • PILE CAP 1 (PC-1) DETAIL
S - 05 of 10	• DETAILS OF 400X400mm PSC PILES
S - 06 of 10	• SECOND FLOOR FRAMING PLAN • ROOF DECK FRAMING PLAN • ROOF OVER STAIRS FRAMING PLAN • TYPICAL DETAIL OF SOG • SLAB CHANGE SOFFIT DETAIL • TYPICAL DETAIL OF STEP-UP • BEAM/SLAB CHANGE SOFFIT DETAIL • WF-1, WF-2, & WF-3 DETAIL
S - 07 of 10	• TYPICAL COLUMN ELEVATION • COLUMN SCHEDULE • FOOTING TIE BEAM SCHEDULE • TYPICAL STIFF. COLUMN ELEVATION • WALL SUPPORTED BY FTB DETAIL
S - 08 of 10	• BEAM SCHEDULE • PARAPET WALL 1, 2, 3 & 4 DETAIL
S - 09 of 10	• TYP. 1-WAY SLAB REINFORCEMENT • TYP. 2-WAY SLAB REINFORCEMENT • SLAB SCHEDULE • CORNER SLAB DETAIL • SLAB OPENING DETAIL • RAMP DETAIL • RAMP SECTION 2A, 2B & 2C
S - 10 of 10	• STAIR DETAIL • LB-1 SECTION

ELECTRICAL

E - 01 of 06	• GROUND, SECOND FLOOR AND ROOF DECK LIGHTING LAYOUT PLAN • LEGEND
E - 02 of 06	• GROUND, SECOND FLOOR AND ROOF DECK POWER LAYOUT PLAN • LEGEND
E - 03 of 06	• ROOF DECK LIGHTNING PROTECTION LAYOUT PLAN
E - 04 of 06	• LOAD SCHEDULE • SINGLE LINE DIAGRAM
E - 05 of 06	• SERVICE ENTRANCE LAYOUT PLAN • GENERAL NOTES • LEGEND
E - 06 of 06	• CONCRETE PEDESTAL POST • DETAIL OF HANDHOLE
BGM/PA - 01 of 01	• GROUND AND SECOND FLOOR BGM / PA LAYOUT PLAN • LEGEND • NOTES ON BGM / PA
FDAS - 01 of 01	• GROUND AND SECOND FLOOR FDAS LAYOUT PLAN • LEGEND • NOTES ON FDAS
CATV - 01 of 01/ TEL - 01 of 01	• GROUND AND SECOND FLOOR CATV AND TELEPHONE LAYOUT PLAN • LEGEND (CATV & TELEPHONE) • NOTES ON CATV AND TELEPHONE

MECHANICAL

M - 01 of 03	• GROUND AND SECOND FLOOR AIR CONDITION LAYOUT PLAN • LEGEND • GENERAL NOTES
M - 02 of 03	• GROUND AND SECOND FLOOR ROOF DECK OUTDOOR AIR COOLED CONDENSING UNIT LAYOUT PLAN • LEGEND
M - 03 of 03	• MECHANICAL EQUIPMENT SCHEDULE • CEILING MOUNTED CASSETTE TYPE AIR CONDITION • SPLIT TYPE AIR CONDITION • GENERAL NOTES
SP - 01 of 01	• ROOF DECK SOLAR PANEL LAYOUT PLAN • NOTES ON ELECTRICAL SPECIFICATION • LEGENDS

PLUMBING

P - 01 of 07	• BOTTOM PLAN OF SEPTIC TANK • TOP PLAN OF SEPTIC TANK • LONGITUDINAL SECTION • CROSS SECTION • SEPTIC TANK MANHOLE COVER DETAILS • PIPE PENETRATION ON R.C. WALL DETAIL • GENERAL NOTES AND SPECIFICATION • MATERIAL SPECIFICATION
P - 02 of 07	• SITE DEVELOPMENT PLAN
P - 03 of 07	• GROUND FLOOR SANITARY DRAINAGE LAYOUT PLAN • SECOND FLOOR SANITARY DRAINAGE LAYOUT PLAN • ROOF DECK FLOOR SANITARY DRAINAGE LAYOUT PLAN • GREASE TRAP DETAIL • LEGENDS • SCHEDULE OF PIPE (SEWER LINE)
P - 04 of 07	• GROUND FLOOR WATER LINE LAYOUT PLAN • SECOND FLOOR WATER LINE LAYOUT PLAN • ROOF DECK FLOOR WATER LINE LAYOUT PLAN • DETAIL OF AIR CHAMBER • DETAIL OF WATER METER • LEGENDS • SCHEDULE OF PIPE (WATER LINE)
P - 05 of 07	• GROUND FLOOR STORM WATER DRAINAGE LAYOUT PLAN • SECOND FLOOR STORM WATER DRAINAGE LAYOUT PLAN • ROOF DECK FLOOR STORM WATER DRAINAGE LAYOUT PLAN • STAIRCASE ROOF DECK STORM WATER DRAINAGE LAYOUT PLAN • DETAIL OF AREA DRAIN • LEGENDS
P - 06 of 07	• SANITARY DRAINAGE ISOMETRIC LAYOUT PLAN • WATER LINE ISOMETRIC LAYOUT PLAN
P - 07 of 07	• STORM WATER DRAINAGE ISOMETRIC LAYOUT PLAN • TYPICAL DETAIL OF ROOF DRAIN

FIRE PROTECTION

FP - 01 of 01	• GROUND FLOOR FIRE EXTINGUISHER LAYOUT • SECOND FLOOR FIRE EXTINGUISHER LAYOUT • ROOF DECK FIRE EXTINGUISHER LAYOUT • PORTABLE FIRE EXTINGUISHER MOUNTING DETAIL • LEGEND

ANNEX

ANX - 01 of 01	• GROUND FLOOR CCTV LAYOUT • SECOND FLOOR CCTV LAYOUT • ROOF DECK CCTV LAYOUT • LEGEND

SECTION VIII

BILL OF QUANTITIES
and
ATTACHMENTS

BID SUMMARY

CONSTRUCTION OF TWO-STOREY TMO BUILDING

Port of Bauan, Batangas

NO.	DESCRIPTION OF WORK	AMOUNT (Pesos)
BILL NO.	1 GENERAL EXPENSES	
BILL NO.	2 CONSTRUCTION OF TMO BUILDING	
	BID PRICE	

Name of Firm

Name of Bidder/Authorized Representative
(Signatory's Legal Capacity)

Date

BILL OF QUANTITIES
CONSTRUCTION OF TWO-STOREY TMO BUILDING
Port of Bauan, Batangas

NO. (1)	DESCRIPTION OF WORK (2)	UNIT (3)	QTY. (4)	UNIT PRICE (Pesos) (5)	AMOUNT (Pesos) (4) x (5)
BILL NO.	**1 GENERAL EXPENSES**				
1.01	Mobilization, demobilization and cleaning	lot	1		
1.02	Rental of temporary site office and residence for the Engineer and staff	mo.	10		
1.03	Maintain temporary site office and residence for the Engineer and staff	mo.	10		
1.04	Provide Construction Safety and Health Program in the execution of the project	mo.	10		
	TOTAL FOR BILL NO. 1				

Bidder's Authorized Signature
Signatory's Legal Capacity

BILL OF QUANTITIES
CONSTRUCTION OF TWO-STOREY TMO BUILDING
Port of Bauan, Batangas

NO. (1)	DESCRIPTION OF WORK (2)	UNIT (3)	QTY. (4)	UNIT PRICE (Pesos) (5)	AMOUNT (Pesos) (4) x (5)
BILL NO.	2 CONSTRUCTION OF TMO BUILDING				
2.01	Remove and dispose existing drainage canal prior for builing construction	l.m.	18		
2.02	Remove existing interlocking paving blocks and turn over to the authority as directed by the Engineer	sq.m.	256		
2.03	Scraping of existing sand cushion, cement treated base course, and aggregate base course up to required elevation	sq.m.	256		
2.04	Excavation and backfilling works for building foundations, septic vault and Electrical works	cu.m.	418		
2.05	Supply and deliver to site 400mm x 400mm PSC Piles	l.m.	352		
2.06	Handle, pitch and drive 400mm x 400mm Vertical PSC Piles	l.m.	352		
2.07	Cut/chip and dispose newly driven PSC Piles up to required elevation	no.	16		
2.08	Subgrade preparations	sq.m.	211		
2.09	Supply and apply soil treatment	sq.m.	211		
2.10	Supply, spread and compact aggregate sub-base course	cu.m.	45		
2.11	Supply, place and compact gravel bedding	cu.m.	32		

Bidder's Authorized Signature
Signatory's Legal Capacity

BILL OF QUANTITIES
CONSTRUCTION OF TWO-STOREY TMO BUILDING
Port of Bauan, Batangas

NO. (1)	DESCRIPTION OF WORK (2)	UNIT (3)	QTY. (4)	UNIT PRICE (Pesos) (5)	AMOUNT (Pesos) (4) x (5)
2.12	Supply and place lean concrete for pile caps	cu.m.	2		
2.13	Supply, spread and compact aggregate base course	cu.m.	21		
2.14	Supply & place 4,000 psi. concrete for building structure	cu.m.	222		
2.15	Supply & install steel reinforcement for building structure	kg.	46,747		
2.16	Construct 4,000 psi. concrete slab and ramp on-fill including reinforcement	sq.m.	185		
2.17	Construct 150mm thick CHB wall including reinforcement	sq.m.	546		
2.18	Construct 100mm thick CHB wall including reinforcement	sq.m.	96		
2.19	Supply and place 13mm thick cement Plaster finish	sq.m.	1,165		
2.20	Supply and install dry wall partition	sq.m.	10		
2.21	Supply and apply Elastomeric paint (2-coats)	sq.m.	1,210		
2.22	Supply and apply Quick dry enamel paint (2-coats)	sq.m.	92		
2.23	Supply and apply water proofing for toilets, footbaths, stair wells, roof deck and canopies	sq.m.	429		
2.24	Supply and install Aluminum Composite Panels and accessories	sq.m.	76		

Bidder's Authorized Signature
Signatory's Legal Capacity

BILL OF QUANTITIES
CONSTRUCTION OF TWO-STOREY TMO BUILDING
Port of Bauan, Batangas

NO. (1)	DESCRIPTION OF WORK (2)	UNIT (3)	QTY. (4)	UNIT PRICE (Pesos) (5)	AMOUNT (Pesos) (4) x (5)
2.25	Supply and Install 0.6m x 0.6m Unglazed Ceramic Tile Fiish	sq.m.	307		
2.26	Suppy and place Non-skid / Rough Cement Floor Finish	sq.m.	10		
2.27	Supply and install 0.6m x 0.6m Non-Slip floor tile	sq.m.	18		
2.28	Supply and install 0.3m x 0.6m Glazed Ceramic wall tiles	sq.m.	133		
2.29	Supply and install Tactile paving for stairs and ramp	sq.m.	6		
2.30	Supply and install Synthetic Granite tile splash board and countertop	sq.m.	8		
2.31	Supply and install Mineral fibre Acoustical lay-in on galvanized steel exposed grid including other accessories (0.60 x 0.60 x 19mm)	sq.m.	100		
2.32	Supply and install 12mm thk. Gypsum board on 0.40mm thk galvanized steel ceiling suspension system at 0.40m O.C. (furring) carrying channel) and suspension rod (C3)	sq.m.	199		
2.33	Supply and install stainless steel buffed finish of various sizes including accessories	lot	1		
2.34	Supply and install fabricated frameless and 1.5 mm thk. Aluminum Framed Doors and Windows including glass partition and other accessories	lot	1		

Bidder's Authorized Signature
Signatory's Legal Capacity

BILL OF QUANTITIES
CONSTRUCTION OF TWO-STOREY TMO BUILDING
Port of Bauan, Batangas

NO. (1)	DESCRIPTION OF WORK (2)	UNIT (3)	QTY. (4)	UNIT PRICE (Pesos) (5)	AMOUNT (Pesos) (4) x (5)
2.35	Supply and install fabricated Cold rolled steel emergency exit Doors with panic bar lock including jumbs and accessories	set.	3		
2.36	Supply and install fabricated Marine Plywood Finish Flush Doors including clear glass, louvers, door jambs, hinges and locksets	lot	1		
2.37	Supply, fabricate and install Phenolic anti-bacterial water proof Toilet partition 12mm thk, including stainless hinges, lock indicators, bottom support door knobs and coat hooks	lot	1		
2.38	Supply and Install Toilet Fixtures and accessories	lot	1		
2.39	Supply and install water line pipes and fittings including accessories.	lot	1		
2.40	Supply and install sewerage pipes and fittings including accessories.	lot	1		
2.41	Supply and install drainage pipes and fittings including accessories	lot	1		
2.42	Construct septic vault including fittings and accessories	no.	1		
2.43	Construct area drain including accessories	no.	13		
2.44	Construct portland cement concrete pavement (300mm thk.) including reinforcements.	sq.m.	56		
2.45	Supply, deliver and install wires and cables of various sizes	lot	1		

Bidder's Authorized Signature
Signatory's Legal Capacity

BILL OF QUANTITIES
CONSTRUCTION OF TWO-STOREY TMO BUILDING
Port of Bauan, Batangas

NO. (1)	DESCRIPTION OF WORK (2)	UNIT (3)	QTY. (4)	UNIT PRICE (Pesos) (5)	AMOUNT (Pesos) (4) x (5)
2.46	Supply, deliver and install conduit pipe including fittings of various sizes	lot	1		
2.47	Supply, deliver and install wiring devices	lot	1		
2.48	Supply, deliver and install protective devices	lot	1		
2.49	Supply, deliver and install lighting fixtures	lot	1		
2.50	Supply, deliver and install lightning protection and accessories	lot	1		
2.51	Supply, deliver and install auxiliary system:				
	a) Community Antenna Television (CATV)	lot	1		
	b) Background Music / Paging Alarm (BGM/PA)	lot	1		
	c) Fire Detection Alarm System (FDAS)	lot	1		
	d) Telephone System	lot	1		
2.52	Supply, deliver and install airconditioning unit	lot	1		
2.53	Construct Reinforced Concrete for Duct bank, Handhole, & Pedestal post	lot	1		
2.54	Supply, deliver and install emergency visibility signages including stair nosing, fire extinguisher and other accessories	lot	1		
2.55	Supply, deliver and install office and kitchen furnitures including accessories	lot	1		
2.56	Supply and install PPA Logo and Port Signages including accessories	lot	1		

Bidder's Authorized Signature
Signatory's Legal Capacity

BILL OF QUANTITIES
CONSTRUCTION OF TWO-STOREY TMO BUILDING
Port of Bauan, Batangas

NO. (1)	DESCRIPTION OF WORK (2)	UNIT (3)	QTY. (4)	UNIT PRICE (Pesos) (5)	AMOUNT (Pesos) (4) x (5)
2.57	Supply, deliver and install distribution transformer including accessories and other incidental expenses	lot	1		
2.58	Supply, deliver and install solar panel including accessories and other incidenal expenses	lot	1		
	TOTAL FOR BILL NO. 2				

Bidder's Authorized Signature
Signatory's Legal Capacity

BASIS OF PAYMENT FOR WORK ITEMS INCLUDED IN THE PROPOSAL

The work items included in the proposal and the basis of payments are as follows:

BILL NO. 1

GENERAL EXPENSES

Item 1.01 Mobilization, demobilization and cleaning

The quantity to be paid for shall be the minimum equipment requirement enumerated in the bid documents mobilized, demobilized and cleaning of the site and accepted by the Engineer. The contract lump sum price shall be full compensation for furnishing all materials, labor, equipment, tools and incidentals necessary to mobilize and demobilize all the minimum equipment requirement enumerated in the bid documents including cleaning of the site. Fifty percent (50%) of the total amount shall be payable after the mobilization activity while the remaining (50%) payable after demobilization and cleaning.

Item 1.02 Rental of temporary site office and residence for the Engineer and staff

The quantity to be paid for shall be the actual rental of site office and residence for the engineer and staff and accepted by the Engineer. The contract unit price shall be full compensation for furnishing all materials, labor, equipment, tools and incidentals necessary for the provision of temporary site office and residence for the engineer and staff.

Item 1.03 Maintain temporary site office and residence for the Engineer and staff

The quantity to be paid for shall be the actual services rendered in maintaining the site office and accepted by the Engineer. The contract unit price shall be full compensation for furnishing all materials, labor, equipment, tools and incidentals necessary to complete the maintenance of the temporary site office and residence as well as other expenses such as provision for electric power, telephone bill, potable water supply, janitorial and security services.

Item 1.04 Provide construction safety and Health Program in the execution of the project

The quantity to be paid for shall be the actual implementation of construction safety and health program and accepted by the Engineer. The contract unit price shall be full compensation for furnishing all materials, labor, equipment, tools and incidentals necessary to complete the implementation of the Construction Safety and Health Program, as required and approved by the Department of Labor and Employment (DOLE).

BILL NO. 2

DEMOLITION, REMOVAL AND EXCAVATION WORKS

Item 2.01 Remove and dispose existing drainage canal prior for building construction

The quantity to be paid for shall be the actual length in linear meter of existing drainage canal to be removed and disposed prior to building construction in accordance with the plans and specifications and accepted by the Engineer. The contract unit price shall be full compensation for furnishing all materials, labor, equipment, tools and incidentals necessary to complete the work.

Item 2.02 Remove existing interlocking paving blocks and turn over to the authority as directed by the Engineer

The quantity to be paid for shall be the actual area in square meter of existing interlocking paving blocks to be removed and turned over to the authority as directed by the Engineer in accordance with the plans and specifications and accepted by the Engineer. The contract unit price shall be full compensation for furnishing all materials, labor, equipment, tools and incidentals necessary to complete the work.

Item 2.03 Scraping of existing sand cushion, cement treated base course, and aggregate base course up to required elevation

The quantity to be paid for shall be the actual area in square meter of existing sand cushion, cement treated base course, and aggregate base course to be scraped up to required elevation in accordance with the plans and specifications and accepted by the Engineer. The contract unit price shall be full compensation for furnishing all materials, labor, equipment, tools and incidentals necessary to complete the work.

Item 2.04 Excavation and backfilling works for building foundations, septic vault and Electrical works

The quantity to be paid for shall be the actual volume in cubic meter materials to be excavated for building foundations, septic vault and Electrical works and backfilled thereafter in accordance with the plans and specifications and accepted by the Engineer. The contract unit price shall be full compensation for furnishing all materials, labor, equipment, tools and incidentals necessary to complete the work.

Item 2.05 Supply and deliver to site 400mm x 400mm PSC Piles

The quantity to be paid for shall be the actual length in linear meter of 400mm x 400mm PSC Piles to be supplied and delivered to site in accordance with the plans and specifications and accepted by the Engineer. The contract unit price shall be full compensation for furnishing all materials, labor, equipment, tools and incidentals necessary to complete the work.

Item 2.06 Handle, pitch and drive 400mm x 400mm Vertical PSC Piles

The quantity to be paid for shall be the actual length in linear meter of 400mm x 400mm vertical PSC Piles to be handled, pitched and driven in accordance with the plans and specifications, measured from the tip of piles to cut-off elevation and accepted by the Engineers. The contract unit price shall be full compensation for furnishing all materials, labor, equipment, tools and incidentals necessary to complete the work

Item 2.07 Chip/cut and dispose newly driven PSC piles up to required elevation

The quantity to be paid for shall be the actual number of newly driven PSC piles, to be chipped off/ cut up to required elevation and properly disposed in accordance with the plans and specifications and accepted by the Engineer. The contract unit price shall be full compensation for furnishing all materials, labor, equipment, tools and incidentals necessary to complete the work.

Item 2.08 Subgrade preparations

The quantity to be paid for shall be the actual area in square meter of subgrade preparations in accordance with the plans and specifications and accepted by the Engineer. The contract unit price shall be full compensation for furnishing all materials, labor, equipment, tools and incidentals necessary to complete the work.

Item 2.09 Supply and apply soil treatment

The quantity to be paid for shall be the actual area in square meter of soil ground applied with treatment in accordance with the plans and specifications and accepted by the Engineer. The contract unit price shall be full compensation for furnishing all materials, labor, equipment, tools and incidentals necessary to complete the work.

Item 2.10 Supply, spread and compact aggregate subbase course

The quantity to be paid for shall be the actual volume in cubic meter of aggregate subbase course to be supplied, spread and compacted in accordance with the plans and specifications and accepted by the Engineer. Hydrographic/Topographic Surveys before and after placing and compacting of aggregate subbase course rocks shall be made to determine the actual elevations along the cross sections and the actual quantities for payment. Volume due to settlement as established using settlement plates shall also be considered for payment. The contract unit price shall be full compensation for furnishing all materials, labor, equipment, tools and incidentals necessary to complete the work.

Item 2.11 Supply, place and compact gravel bedding

The quantity to be paid for shall be the actual volume in cubic meter of gravel bedding, supplied, set-in-place and compacted in accordance with the plans and specifications and accepted by the Engineer. The contract unit price shall be full compensation for furnishing all materials, labor, equipment, tools and incidentals necessary to complete the work.

Item 2.12 Supply and place lean concrete for pile caps

The quantity to be paid for shall be the actual volume in cubic meter of lean concrete for pile caps to be supplied and set-in-place in accordance with the plans and specifications and accepted by the Engineer. The contract unit price shall be full compensation for furnishing all materials, labor, equipment, tools and incidentals necessary to complete the work.

Item 2.13 Supply, spread and compact aggregate base course

The quantity to be paid for shall be the actual volume in cubic meter of aggregate base course to be supplied, spread and compacted in accordance with the plans and specifications and accepted by the Engineer. The contract unit price shall be full

compensation for furnishing all materials, labor, equipment, tools and incidentals necessary to complete the work.

Item 2.14 Supply and place 4,000 psi concrete for building structure

The quantity to be paid for shall be the actual volume in cubic meter of 4,000 psi concrete for building structure, supplied and set-in-place in accordance with the plans and specifications and accepted by the Engineer. The contract unit price shall be full compensation for furnishing all materials, labor, equipment, tools and incidentals necessary to complete the work.

Item 2.15 Supply and install steel reinforcement for building structure

The quantity to be paid for shall be the actual weight in kilogram of reinforcing steel bars for building structure, supplied and installed in accordance with the plans and specifications and accepted by the Engineer. The contract unit price shall be full compensation for furnishing all materials, labor, equipment, tools and incidentals necessary to complete the work.

Item 2.16 Construct 4,000 psi. concrete slab and ramp on-fill including reinforcements

The quantity to be paid for shall be the actual area in square meter of 4,000 psi. concrete slab and ramp on-fill including reinforcements, constructed in accordance with the plans and specifications and accepted by the Engineer. The contract unit price shall be full compensation for furnishing all materials, labor, equipment, tools and incidentals necessary to complete the work.

Item 2.17 Construct 150mm thick CHB wall including reinforcement

The quantity to be paid for shall be the actual area in square meter of 150mm thick CHB wall including reinforcement, constructed in accordance with the plans and specifications and accepted by the Engineer. The contract unit price shall be full compensation for furnishing all materials, labor, equipment, tools and incidentals necessary to complete the work.

Item 2.18 Construct 100mm thick CHB wall including reinforcement

The quantity to be paid for shall be the actual area in square meter of 100mm thick CHB wall including reinforcement, constructed in accordance with the plans and specifications and accepted by the Engineer. The contract unit price shall be full compensation for furnishing all materials, labor, equipment, tools and incidentals necessary to complete the work.

Item 2.19 Supply and place 13mm thick cement plaster finish

The quantity to be paid for shall be the actual area in square meter of 13mm thick cement plaster finish, supplied and set-in-place in accordance with the plans and specifications and accepted by the Engineer. The contract unit price shall be full compensation for furnishing all materials, labor, equipment, tools and incidentals necessary to complete the work.

Item 2.20 Supply and install dry wall partition

The quantity to be paid for shall be the actual area in square meter of dry wall partition, supplied and installed in accordance with the plans and specifications and accepted by

the Engineer. The contract unit price shall be full compensation for furnishing all materials, labor, equipment, tools and incidentals necessary to complete the work.

Item 2.21 Supply and apply elastomeric paint (2-coats)

The quantity to be paid for shall be the actual area in square meter of surfaces supplied and applied with elastomeric paint (2-coats) in accordance with the plans and specifications and accepted by the Engineer. The contract unit price shall be full compensation for furnishing all materials, labor, equipment, tools and incidentals necessary to complete the work.

Item 2.22 Supply and apply Quick dry enamel paint (2-coats)

The quantity to be paid for shall be the actual area in square meter of surfaces supplied and applied with Quick dry enamel paint (2-coats) in accordance with the plans and specifications and accepted by the Engineer. The contract unit price shall be full compensation for furnishing all materials, labor, equipment, tools and incidentals necessary to complete the work.

Item 2.23 Supply and apply water proofing for toilets, footbaths, stair wells, roof deck and canopies

The quantity to be paid for shall be the actual area in square meter of water proofing for toilets, footbaths, stair wells, roof deck and canopies, supplied and applied in accordance with the plans and specifications and accepted by the Engineer. The contract unit price shall be full compensation for furnishing all materials, labor, equipment, tools and incidentals necessary to complete the work.

Item 2.24 Supply and install aluminum composite panel and accessories

The quantity to be paid for shall be the actual area in square meter of aluminum composite panel and accessories, supplied and installed in accordance with the plans and specifications and accepted by the Engineer. The contract unit price shall be full compensation for furnishing all materials, labor, equipment, tools and incidentals necessary to complete the work.

Item 2.25 Supply and install 0.60m x 0.60m Unglazed Ceramic Tile Finish

The quantity to be paid for shall be the actual area in square meter of unglazed ceramic Tile Finish (0.60m x 0.60m), supplied and installed in accordance with the plans and specifications and accepted by the Engineer. The contract unit price shall be full compensation for furnishing all materials, labor, equipment, tools and incidentals necessary to complete the work

Item 2.26 Supply and place Non-skid/rough cement floor finish

The quantity to be paid for shall be the actual area in square meter of Non-skid/rough cement floor finish, supplied and set-in-place in accordance with the plans and specifications and accepted by the Engineer. The contract unit price shall be full compensation for furnishing all materials, labor, equipment, tools and incidentals necessary to complete the work.

Item 2.27 Supply and install 0.60m x 0.60m Non-Slip Floor tiles

The quantity to be paid for shall be the actual area in square meter of non-slip Floor tile (0.60m x 0.60m), supplied and installed in accordance with the plans and

specifications and accepted by the Engineer. The contract unit price shall be full compensation for furnishing all materials, labor, equipment, tools and incidentals necessary to complete the work.

Item 2.28 Supply and install 0.30m x 0.60m Glazed Ceramic Wall Tiles

The quantity to be paid for shall be the actual area in square meter of glazed ceramic wall tiles (0.30m x 0.60m), supplied and installed in accordance with the plans and specifications and accepted by the Engineer. The contract unit price shall be full compensation for furnishing all materials, labor, equipment, tools and incidentals necessary to complete the work.

Item 2.29 Supply and install tactile paving for stairs and ramp

The quantity to be paid for shall be the actual area in square meter of tactile paving for stairs and ramp, supplied and installed in accordance with the plans and specifications and accepted by the Engineer. The contract unit price shall be full compensation for furnishing all materials, labor, equipment, tools and incidentals necessary to complete the work.

Item 2.30 Supply and install Synthetic Granite tile splash board and countertop

The quantity to be paid for shall be the actual area in square meter of Synthetic Granite tile splash board and countertop, supplied and installed in accordance with the plans and specifications and accepted by the Engineer. The contract unit price shall be full compensation for furnishing all materials, labor, equipment, tools and incidentals necessary to complete the work.

Item 2.31 Supply and install Mineral fibre Acoustical lay-in on galvanized steel exposed grid including other accessories (0.60 x 0.60 x 19mm)

The quantity to be paid for shall be the actual area in square meter of Mineral fibre Acoustical lay-in on galvanized steel exposed grid including other accessories (0.60 x 0.60 x 19mm), supplied and installed in accordance with the plans and specifications and accepted by the Engineer. The contract unit price shall be full compensation for furnishing all materials, labor, equipment, tools and incidentals necessary to complete the work.

Item 2.32 Supply and install 12mm thk. Gypsum board on 0.40mm thk. galvanized steel ceiling suspension system at 0.40m O.C. (furring carrying channel) and suspension rod (C3)

The quantity to be paid for shall be the actual area in square meter of 12mm thk. Gypsum board on 0.40mm thk. galvanized steel ceiling suspension system at 0.40m O.C. (furring carrying channel) and suspension rod (C3), supplied and installed in accordance with the plans and specifications and accepted by the Engineer. The contract unit price shall be full compensation for furnishing all materials, labor, equipment, tools and incidentals necessary to complete the work.

Item 2.33 Supply and install stainless steel buffed finish of various sizes including accessories

The quantity to be paid for shall be the actual lot of stainless steel buffed finish of various sizes including accessories, supplied and installed in accordance with the plans and specifications and accepted by the Engineer. The contract unit price shall be

full compensation for furnishing all materials, labor, equipment, tools and incidentals necessary to complete the work.

Item 2.34 Supply and install fabricated frameless and 1.5mm thick aluminum Framed Doors and Windows including glass partition and other accessories

The quantity to be paid for shall be the actual lot of fabricated frameless and 1.5mm thick aluminum Framed Doors and Windows including glass partition and other accessories, supplied and installed in accordance with the plans and specifications and accepted by the Engineer. The contract unit price shall be full compensation for furnishing all materials, labor, equipment, tools and incidentals necessary to complete the work.

Item 2.35 Supply and install fabricated cold rolled steel emergency exit doors with panic bar lock including jumbs and accessories

The quantity to be paid for shall be the actual set of fabricated cold rolled steel emergency exit doors with panic bar lock including jumbs and accessories, supplied and installed in accordance with the plans and specifications and accepted by the Engineer. The contract unit price shall be full compensation for furnishing all materials, labor, equipment, tools and incidentals necessary to complete the work.

Item 2.36 Supply and install fabricated Marine Plywood Finish Flush Doors including clear glass, louvers, door jambs, hinges and locksets

The quantity to be paid for shall be the actual lot of solid door and Marine Plywood Finish Flush Doors including clear glass, louvers, door jambs, hinges and locksets, supplied and installed in accordance with the plans and specifications and accepted by the Engineer. The contract unit price shall be full compensation for furnishing all materials, labor, equipment, tools and incidentals necessary to complete the work.

Item 2.37 Supply, fabricate and install Phenolic anti-bacterial water proof Toilet partition 12mm thick, including stainless hinges, lock indicators, bottom support door knobs and coat hooks

The quantity to be paid for shall be the actual lot of Phenolic anti-bacterial water proof Toilet partition 12mm thick, including stainless hinges, lock indicators, bottom support door knobs and coat hooks, supplied, fabricated and installed in accordance with the plans and specifications and accepted by the Engineer. The contract unit price shall be full compensation for furnishing all materials, labor, equipment, tools and incidentals necessary to complete the work.

Item 2.38 Supply and install Toilet Fixtures and accessories

The quantity to be paid for shall be the actual lot of toilet fixtures and accessories, supplied and installed in accordance with the plans and specifications and accepted by the Engineer. The contract unit price shall be full compensation for furnishing all materials, labor, equipment, tools and incidentals necessary to complete the work.

Item 2.39 Supply and install water line pipes and fittings including accessories

The quantity to be paid for shall be the actual lot of water line pipes and fittings including accessories, supplied and installed in accordance with the plans and specifications and accepted by the Engineer. The contract unit price shall be full compensation for furnishing all materials, labor, equipment, tools and incidentals necessary to complete the work.

Item 2.40 Supply and install sewerage pipes and fittings including accessories

The quantity to be paid for shall be the actual lot of sewerage pipes and fittings including accessories, supplied and installed in accordance with the plans and specifications and accepted by the Engineer. The contract unit price shall be full compensation for furnishing all materials, labor, equipment, tools and incidentals necessary to complete the work.

Item 2.41 Supply and install drainage pipes and fittings including accessories

The quantity to be paid for shall be the actual lot of drainage pipes and fittings including accessories, supplied and installed in accordance with the plans and specifications and accepted by the Engineer. The contract unit price shall be full compensation for furnishing all materials, labor, equipment, tools and incidentals necessary to complete the work.

Item 2.42 Construct septic vault including fittings and accessories

The quantity to be paid for shall be the actual number of septic vault including fittings and accessories, constructed in accordance with the plans and specifications, measured from the tip of piles to cut-off elevation and accepted by the Engineer. The contract unit price shall be full compensation for furnishing all materials, labor, equipment, tools and incidentals necessary to complete the work.

Item 2.43 Construct area drain including accessories

The quantity to be paid for shall be the actual number of area drain including accessories, constructed in accordance with the plans and specifications, measured from the tip of piles to cut-off elevation and accepted by the Engineer. The contract unit price shall be full compensation for furnishing all materials, labor, equipment, tools and incidentals necessary to complete the work.

Item 2.44 Construct portland cement concrete pavement (300mm thk.) including reinforcements.

The quantity to be paid for shall be the actual area in square meter of portland cement concrete pavement (300mm thk.) including reinforcements, constructed in accordance with the plans and specifications, measured from the tip of piles to cut-off elevation and accepted by the Engineer. The contract unit price shall be full compensation for furnishing all materials, labor, equipment, tools and incidentals necessary to complete the work.

Item 2.45 Supply, deliver and install wires and cables of various sizes

The quantity to be paid for shall be the actual lot of wires and cables of various sizes to be supplied, delivered and installed in accordance with the plans and specifications and accepted by the Engineer. The contract unit price shall be full compensation for furnishing all materials, labor, equipment, tools and incidentals necessary to complete the work.

Item 2.46 Supply, deliver and install conduit pipe including fittings of various sizes

The quantity to be paid for shall be the actual lot of conduit pipe including fittings of various sizes to be supplied, delivered and installed in accordance with the plans and specifications and accepted by the Engineer. The contract unit price shall be full

compensation for furnishing all materials, labor, equipment, tools and incidentals necessary to complete the work.

Item 2.47 Supply, deliver and install wiring devices

The quantity to be paid for shall be the actual lot of wiring devices to be supplied, delivered and installed in accordance with the plans and specifications and accepted by the Engineer. The contract unit price shall be full compensation for furnishing all materials, labor, equipment, tools and incidentals necessary to complete the work.

Item 2.48 Supply, deliver and install protective devices

The quantity to be paid for shall be the actual lot of protective devices to be supplied, delivered and installed in accordance with the plans and specifications and accepted by the Engineer. The contract unit price shall be full compensation for furnishing all materials, labor, equipment, tools and incidentals necessary to complete the work.

Item 2.49 Supply, deliver and install lighting fixtures

The quantity to be paid for shall be the actual lot of lighting fixtures to be supplied, delivered and installed in accordance with the plans and specifications and accepted by the Engineer. The contract unit price shall be full compensation for furnishing all materials, labor, equipment, tools and incidentals necessary to complete the work.

Item 2.50 Supply, deliver and install lightning protection and accessories

The quantity to be paid for shall be the actual lot of lightning protection and accessories to be supplied, delivered and installed in accordance with the plans and specifications and accepted by the Engineer. The contract unit price shall be full compensation for furnishing all materials, labor, equipment, tools and incidentals necessary to complete the work.

Item 2.51 Supply, deliver and install auxiliary system:

a) Community Antenna Television (CATV)
b) Background Music / Paging Alarm (BGM/PA)
c) Fire Detection Alarm System (FDAS)
d) Telephone System

The quantity to be paid for shall be the actual lot of auxiliary system to be supplied, delivered and installed in accordance with the plans and specifications and accepted by the Engineer. The contract unit price shall be full compensation for furnishing all materials, labor, equipment, tools and incidentals necessary to complete the work.

Item 2.52 Supply, deliver and install air conditioning unit

The quantity to be paid for shall be the actual lot of air conditioning unit to be supplied, delivered and installed in accordance with the plans and specifications and accepted by the Engineer. The contract unit price shall be full compensation for furnishing all materials, labor, equipment, tools and incidentals necessary to complete the work.

Item 2.53 Construct Reinforced Concrete for Duct bank, handhole and pedestal post

The quantity to be paid for shall be the actual lot of reinforced concrete for Duct bank, handhole and pedestal post, constructed in accordance with the plans and specifications and accepted by the Engineer. The contract unit price shall be full

compensation for furnishing all materials, labor, equipment, tools and incidentals necessary to complete the work.

Item 2.54 Supply, deliver and install emergency visibility signages including stair nosing, fire extinguisher and other accessories

The quantity to be paid for shall be the actual lot of emergency visibility signages including stair nosing, fire extinguisher and other accessories, supplied, delivered and installed in accordance with the plans and specifications and accepted by the Engineer. The contract unit price shall be full compensation for furnishing all materials, labor, equipment, tools and incidentals necessary to complete the work.

Item 2.55 Supply, deliver and install office and kitchen furniture including accessories

The quantity to be paid for shall be the actual lot of office furniture to be supplied and delivered in accordance with the plans and specifications and accepted by the Engineer. The contract unit price shall be full compensation for furnishing all materials, labor, equipment, tools and incidentals necessary to complete the work.

Item 2.56 Supply and install PPA Logo and Port Signages including accessories

The quantity to be paid for shall be the actual lot of PPA Logo and Port Signages including accessories to be supplied and installed in accordance with the plans and specifications and accepted by the Engineer. The contract unit price shall be full compensation for furnishing all materials, labor, equipment, tools and incidentals necessary to complete the work

Item 2.57 Supply, deliver and install distribution transformer including accessories and other incidental expenses

The quantity to be paid for shall be the actual lot of distribution transformer including accessories and other incidental expenses to be supplied, delivered, installed and commissioned in accordance with the plans and specifications and accepted by the Engineer. The contract unit price shall be full compensation for furnishing all materials, labor, equipment, tools and incidentals necessary to complete the work.

Item 2.58 Supply, deliver and install solar panel including accessories and other incidental expenses

The quantity to be paid for shall be the actual lot of solar panel including accessories and other incidental expenses to be supplied, delivered, installed and commissioned in accordance with the plans and specifications and accepted by the Engineer. The contract unit price shall be full compensation for furnishing all materials, labor, equipment, tools and incidentals necessary to complete the work.

FACILITIES TO BE PROVIDED FOR THE ENGINEER & HIS STAFF

RENTAL OF SITE OFFICE AND RESIDENCE FOR THE ENGINEER & STAFF

The Contractor shall provide a temporary site office and residence (rental) with an area of at least 48 square meters for use of the Engineer and his staff for the whole duration of the project.

MINIMUM MAJOR EQUIPMENT REQUIREMENTS

2	unit/s	Air-compressor (250cfm, minimum), owned
1	unit/s	Backhoe (0.40 cu.m., 94.30hp, minimum), owned
1	unit/s	Concrete Cutter, owned
2	unit/s	Concrete Mixer (1 bagger, minimum), owned
2	unit/s	Concrete Bucket, owned
1	unit/s	Concrete Screeder, owned
2	unit/s	Concrete Vibrator (3.50 hp, minimum), owned
1	unit/s	Crawler Crane (30T, minimum), owned/leased
1	unit/s	Crawler Crane (20T, minimum), owned/leased
1	unit/s	Pile Hammer (Diesel, 10,500 kg.m.), owned/leased
1	unit/s	Drop Hammer (2T, minimum), owned
1	unit/s	Dump Truck (8 cu.m., minimum), owned
2	unit/s	Bar Bender (electric, 25mm dia min.), owned
2	unit/s	Bar Cutter (electric, 25mm dia min.), owned
2	unit/s	Jackhammer, owned
2	unit/s	Oxy/Acetylene Cutting Outfit, owned
1	unit/s	Payloader (80 hp, minimum), owned/leased
2	unit/s	Plate Compactor (5 hp, minimum), owned
1	unit/s	Road Grader (125hp, minimum), owned/leased
1	unit/s	Road Roller (12.05T, vibratory, minimum), owned/leased
2	unit/s	Transit Mixer (5-6 cu.m. cap., minimum), owned/leased
1	unit/s	Water Truck with pump (1,000 gal., minimum), owned
2	unit/s	Welding Machine (400 amp., minimum), owned
1	unit/s	Cargo Truck (5T, minimum), owned
1	unit/s	Concrete breaker (Backhoe Attachment), owned/leased

CONSTRUCTION SAFETY AND HEALTH REQUIREMENT

The Contractor shall implement the construction safety and health program in accordance with the applicable provisions of the Occupational Safety and Health Standards (OSHS) of the Department of Labor and Employment (DOLE).

The Contractor, subject to the approval of the Engineer shall provide and maintain throughout the duration of the contract a medical room with at least 15 square meters together with all necessary supplies to be sited in the Contractor's main area.

The Contractor shall provide the following minimum requirements:

L A B O R

1	no.	Safety Engineer / Officer
1	no.	Nurse / Health Officer

EQUIPMENT / MATERIALS

Personnel Protective Equipment

45	pcs.	Hard Hats
45	pairs	Gloves (rubberized)
45	pcs.	Safety Glasses/Goggles (clear)
90	pcs.	Long sleeve T-shirt
8	pc.	Aprons
4	pc.	Safety Belts
45	pairs	Safety Shoes
4	set	Life Lines

Safety Devices

1	lot	Barricades
1	lot	Warning signs
2	unit/s	Fire extinguisher (10kg)

Medical and First Aid System	-	Ten (10) mos.
Temporary shelter for workers	-	1 lot

NOTE:

The Contractor shall provide the above-cited minimum construction safety and health requirements or as required by the Engineer.

PPA MEMORANDUM CIRCULAR
No. 02
Series of 2016
Attachment

Page 1 of 10

REVISED SCHEDULE OF MINIMUM TEST REQUIREMENTS OF CONSTRUCTION MATERIALS FOR PPA INFRASTRUCTURE PROJECTS

Materials/Items of Work	*Required Tests*	*Minimum Incremental Frequency of Tests*
I. Construction of Pier/Wharf, Platform and Ramp		
Structural Concrete (SC)		
A Portland Cement	Quality Test	For every 2,000 bags (40kg) or fraction thereof
B Fine Aggregate	Quality Test for Grading, Elutriation (wash), Bulk Specific Gravity, Absorption, Mortar Strength, Soundness, Organic Impurities, Unit Weight, % Clay Lumps and Shale	For every 1,500 cubic meter or fraction thereof
C Coarse Aggregate	Quality Test for Grading, Bulk Specific Gravity, Absorption and Abrasion	For every 1,500 cubic meter or fraction thereof
D Water	Certificate from the Engineer or Quality Test for Density and Chloride Content	One per source
E Steel Bars	Mill Certificate and Quality Test for Chemical Composition and Mechanical Properties	For every 10,000 kg or fraction thereof
F Concrete	Compressive Strength on cylinder samples	1 set consisting of 3 concrete cylinder samples shall be taken from each day's pouring and to represent not more than 75 cu m of concrete or fraction thereof
	Slump Test	For every mix
G Admixture and Concrete Curing Materials	Quality Test	One per shipment
Piling (P)		
A Concrete Piles	Fabrication Report	One per fabrication
1 Concrete	Same test as for SC (F)	Same frequency as SC (F)
2 Steel Bars	Same test as for SC (E)	Same frequency as SC (E)
3 High Tension Strand	Test for Chemical Composition and Mechanical Properties	For every 20000kg or fraction thereof

Materials/Items of Work	Required Tests	Minimum Incremental Frequency of Tests
4 Coarse Aggregates	Same Test as for SC (C)	Same frequency as SC (C)
5 Fine Aggregates	Same Test as for SC (B)	Same frequency as SC (B)
B Steel Pipe Piles	Fabrication Report, Mill Certificate and Quality Test for Chemical and Mechanical properties	One per fabrication
1 Steel	Chemical Composition (refer below)	
	- Under 14" (355 60mm) Outside Diameter	2 from 200 pipe of fraction thereof
	- 14" to 36" (355 6 to 914mm) Outside Dia	2 from 100 pipe or fraction thereof
	- Over 36" (914mm) Outside Diameter	2 from 3000ft (914m) or fraction thereof
	Mechanical/Tensile	One (1) tension test shall be made on one length or fraction thereof of each size, or one piece of skelp representing each lot of 200 lengths or fraction thereof of each size
2 Polyurethane Coating	Mill Certificate and Quality Test	One per fabrication
3 Concrete	Same test as for SC (F)	Same frequency as SC (F)
4 Fine Aggregate	Same test as for SC (B)	Same frequency as SC (B)
5 Coarse Aggregate	Same test as for SC (C)	Same frequency as SC (C)
6 Steel Bars	Same Test as SC (E)	Same frequency as SC (E)
7 Water	Same Test as SC (D)	Same frequency as SC (D)
Rubber Dock Fenders (RDF)	Physical Test	All units
	Performance Test for Energy Absorption and Reaction Force	All units
Accessories		
Washer and Fixing Bolt, Anchor Bolt	Physical Test	All units
	Quality Test for Chemical Composition and Mechanical Properties	One per fabrication

Materials/Items of Work	***Required Tests***	***Minimum Incremental Frequency of Tests***
Mooring Bollard (MB) and Accessories (Hexagon Nuts, Plain Washer, Anchor Ring and Anchor Bolt)	Physical Test Quality Test for Chemical Composition and Mechanical Properties	All Units One per fabrication
II. Construction of Back-Up Area, Causeway and Pavement		
Sheet Piling (SP)		
A Concrete Sheet Piles		
1 Concrete	Same test as for SC (F)	Same frequency as SC (F)
2 Steel Bars	Same test as for SC (E)	Same frequency as SC (E)
3 High Tension Strands	Same test as for P (A 3)	Same frequency as P (A 3)
4 Fine Aggregates	Same test as for SC (B)	Same frequency as SC (B)
5 Coase Aggregates	Same Test as for SC (C)	Same frequency as SC (C)
B Steel Pipe Piles		
1 Steel	Same test as for P (B1)	Same frequency as P (B1)
2 Concrete	Same test as for SC (F)	Same frequency as SC (F)
3 Fine Aggregate	Same test as for SC (B)	Same frequency as SC (B)
4 Steel Bars	Same test as for SC (E)	Same frequency as SC (E)

Materials/Items of Work	***Required Tests***	***Minimum Incremental Frequency of Tests***
Rocks	Test for Apparent Specific Gravity and Abrasion	For every 1,500 cubic meter or fraction thereof
Geotextile Filter	Physical and Mechanical Test Mill Certificate	One per batch One per batch
Sand and Gravel Fill	Quality Test for Organic Impurities and Grading	For every 1,500 cubic meter or fraction thereof
Selected Fill	Quality Test for Grading, Plasticity and Laboratory Compaction Test Laboratory California Bearing Ratio (CBR) Field Density Test	For every 1,500 cubic meter or fraction thereof For every 2,500 cubic meter or fraction thereof For every layer of 150mm of compacted depth at least one group of three in-situ density test for every 500 sq m or fraction thereof
Aggregate Base Course	Quality Test for Grading and Plasticity Quality Test for Grading, Plasticity, Abrasion and Laboratory Compaction Test Laboratory California Bearing Ratio (CBR) Field Density Test	For every 300 cubic meter or fraction thereof For every 1,500 cubic meter or fraction thereof Same frequency as Selected Fill Same frequency as Selected Fill
Portland Cement Concrete Pavement (PCCP)		
A Portland Cement	Same test as for SC (A)	Same frequency as SC (A)
B Fine Aggregate	Same test as for SC (B)	Same frequency as SC (B)
C Coarse Aggregate	Same test as for SC (C)	Same frequency as SC (C)
D Water	Same test as for SC (D)	Same frequency as SC (D)
E Steel Bars (Dowels)	Same test as for SC (E)	Same frequency as SC (E)
F Joint Filler	Quality Test	One (1) per shipment

Materials/Items of Work	*Required Tests*	*Minimum Incremental Frequency of Tests*
G Admixture and Concrete Curing Material	Same test as for SC (G)	Same frequency as SC (G)
H Concrete	Same test as for SC (F)	Same frequency as SC (F)
	Flexural Test	3 beam samples for every 330 sq m or fraction thereof
I Completed Pavement	Core Test	1 set (3 specimen) for every 2,500 sq m and fraction thereof
Interlocking Concrete Blocks		
A Cement	Same test as for SC (A)	Same frequency as SC (A)
B Fine Aggregate	Same test as for SC (B)	Same frequency as SC (B)
C Coarse Aggregate	Same test as for SC (C)	Same frequency as SC (C)
D Water	Same test as for SC (D)	Same frequency as SC (D)
E Admixture & Concrete Curing Materials	Same test as for SC (G)	Same frequency as SC (G)
F Completed Blocks	Physical Test and Compressive Strength	6 blocks per day of fabrication
Cement Treated Base Course (CTB)		
A Portland Cement	Same test as for SC (A)	Same frequency as SC (A)
B Fine & Coarse Aggregates	Quality Test for Grading, Abrasion and Soundness	For every 1,500 cubic meter or fraction thereof
C Water	Same test as for SC (D)	Same frequency as SC (D)
D Completed CTB	Field Density Test	For every layer of 150mm of compacted depth at least one group of three in-situ density test every 500 sq m or fraction thereof
Retaining Wall/Coping Wall/RC Curb/RC Ditch/Shear Key/Concrete Blocks\Lean Concrete		
A Portland Cement	Same test as for SC (A)	Same frequency as SC (A)
B Fine Aggregate	Same test as for SC (B)	Same frequency as SC (B)

Materials/Items of Work	*Required Tests*	*Minimum Incremental Frequency of Tests*
C Coarse Aggregates	Same test as for SC (C)	Same frequency as SC (C)
D Water	Same test as for SC (D)	Same frequency as SC (D)
E Steel Bars	Same test as for SC (E)	Same frequency as SC (E)
F Admixture and Concrete Curing	Same test as for SC (G)	Same frequency as SC (G)
G Concrete	Same test as for SC (F)	Same frequency as SC (F)
Tie Rod		
A Steel	Same test as for SC (E)	One per batch
B Assembly	Performance Test (Tension)	One per batch
Tie Bars and Dowels	Same test as for SC (E)	For every 10,000 kg or fraction thereof per Tie bars and Dowels
Pipe Culverts and Storm Drains		
A Pipes	Test for Strength, Absorption and Physical	For every 50 pieces
B Mortar or Joint	Same Test as for SC (A,B and D) Alternative Test Same test as for SC (F) and Inspection Report	For every 25 pieces
Concrete Hollow Blocks		
A Portland Cement	Same test as for SC (A)	Same frequency as SC (A)
B Fine Aggregates	Same test as for SC (B)	Same frequency as SC (B)
C Water	Same test as for SC (D)	Same frequency as SC (C)
D Concrete	Same test as for SC (F)	Same frequency as SC (F)
E Completed CHB	Quality Test	One for every 500 pieces or fraction thereof
Construction Joints (CJ)		
A Angle Bars	Test for Physical and Mechanical Properties	One per batch
B Steel Bars	Same test as for SC (E)	One per batch
C Zinc (Hot Dip Galvanizing) Coatings	Physical Test for Appearance, Stripping, Weighing, Adherence and Adhesion	All units
	Coating Thickness Magnetic Thickness Measurement	1 set (3 specimen) for every 100,000 sq mm or fraction thereof

Materials/Items of Work	***Required Tests***	***Minimum Incremental Frequency of Tests***
Sacked Concrete		
A Cement	Same test as for SC (A)	Same frequency as SC (A)
B Fine Aggregates	Same test as for SC (B)	Same frequency as SC (B)
C Coarse Aggregates	Same test as for SC (C)	Same frequency as SC (C)
D Water	Same test as for SC (D)	Same frequency as SC (D)
E Concrete	Same test as for SC (F)	Same frequency as SC (F)
F Sack (jute)	Physical Test	One for every 50 pieces
Rubble Concrete		
A Cement	Same test as for SC (A)	Same frequency as SC (A)
B Fine Aggregates	Same test as for SC (B)	Same frequency as SC (B)
C Coarse Aggregates	Same test as for SC (C)	Same frequency as SC (C)
D Water	Same test as for SC (D)	Same frequency as SC (D)
E Concrete	Same test as for SC (F)	Same frequency as SC (F)
F Rocks	Same test as for ROCKS	Same frequency as ROCKS
Earthworks		
A Sub-grade preparation	Grading Test Plasticity Test (LL,PL,PI) Laboratory Compaction Test	For every 1,500 cubic meter or fraction thereof
	Density Test	For every layer of 150mm of compacted depth at least one group of three In-situ density test every 500 sq m or fraction thereof
B Structure Excavation	If excavated materials shall be used as Backfill Grading Test Plasticity Test (LL,PL,PI) Laboratory Compaction Test	For every 1,500 cubic meter or fraction thereof
	Density Test	For every layer of 150mm of compacted depth at least one group of three In-situ density test every 500 sq m or fraction thereof

Materials/Items of Work	*Required Tests*	*Minimum Incremental Frequency of Tests*
III Port Operations Building/Passenger Terminal Building/Transit Shed/Warehouse		
STRUCTURAL WORKS	Refer to Structural Concrete (SC) and Piling Works (P)	
ARCHITECTURAL WORKS		
Ceramic – Filled Liquid Membrane / Water Proofing, Hydrophobic Poreblocking Ingredients with Superplasticizer	Physical Property, Mechanical and Chemical Property, Leak Test / Flood Test	One per shipment
Paint	Quality Test	One 4-L can for every 100 cans or fraction thereof
Ceramic Tile	Inspection and Evaluation Report from the Engineer	One per shipment
Stainless Steel	Inspection and Evaluation Report from the Engineer	One per shipment
Roofing Materials	Inspection and Evaluation Report from the Engineer	One per shipment
Ceiling Materials	Inspection and Evaluation Report from the Engineer	One per shipment
ELECTRICAL AND MECHANICAL WORKS		
Wires / Cables	Inspection and Evaluation Report from the Engineer Testing and Commissioning	One per shipment
Electrical Devices	Inspection and Evaluation Report from the Engineer Testing and Commissioning	One per shipment
Fire Alarm System	Inspection and Evaluation Report from the Engineer Testing and Commissioning	One per item
Wiring Devices	Inspection and Evaluation Report from the Engineer Testing and Commissioning	One per shipment

Materials/Items of Work	Required Tests	Minimum Incremental Frequency of Tests
Protective Devices	Inspection and Evaluation Report from the Engineer Testing and Commissioning	One per shipment
Telephone System	Inspection and Evaluation Report from the Engineer Testing and Commissioning	One per item
CCTV System	Inspection and Evaluation Report from the Engineer Testing and Commissioning	One per item
CATV System	Inspection and Evaluation Report from the Engineer Testing and Commissioning	One per item
Background Music and Paging System	Inspection and Evaluation Report from the Engineer, Testing and Commissioning	One per item
Air Conditioning Units & Ventilation	Inspection and Evaluation Report from the Engineer Testing and Commissioning	One per item
Conduit Pipes	Inspection and Evaluation Report from the Engineer Testing and Commissioning	One per item
Lighting Fixtures	Inspection and Evaluation Report from the Engineer Testing and Commissioning	One per item
PLUMBING WORKS		
Pipes	Inspection and Evaluation Report from the Engineer Testing and Commissioning	One per item

Materials/Items of Work	Required Tests	Minimum Incremental Frequency of Tests
Fixtures	Inspection and Evaluation Report from the Engineer Testing and Commissioning	One per item
Pipe Culverts	Compression Strength Inspection and Evaluation Report from the Engineer	For every size not more than 25 pipes cast in the field
IV Miscellaneous Materials Fencing A Barbed Wire, Cyclone Wire Mesh, Chain Link B Concrete Post	 Physical Test (Dimensions and Coatings) Refer to Superstructure (SC)	 One per Batch Refer to Superstructure (SC)
Lamp Post A Structural Steel B Zinc (Hot Dip Galvanizing) Coatings	Physical Test (Dimensions) Same test as for SC (E) Same test as for CJ (C)	All units One per batch
Drainage Steel Grating	Same test as for SC (E) Inspection Report	One (1) batch
Metal Pipe (Cast Iron Galvanized, etc)	Physical Test (Dimensions and Coatings)	1 per delivery
Welding Works	Destructive and Non Destructive Test	One (1) per lot

NOTES
1. **Testing of RDF shall be performed only by an independent Testing Laboratory duly accredited by BRS, DOST and PPA**
2. **Testing of other materials shall be performed only by an independent Testing Laboratory duly accredited by BRS and PPA.**
3. **All other issuances which are otherwise inconsistent herewith are hereby revoked or otherwise amended.**

Approved

RAUL T. SANTOS
Officer-In-Charge,
Office of the General Manager

SECTION IX

CHECKLIST OF TECHNICAL AND FINANCIAL DOCUMENTS

Checklist of Technical and Financial Documents

I. TECHNICAL COMPONENT ENVELOPE

Class "A" Documents

Legal Documents

☐ (a) Valid PhilGEPS Registration Certificate (Platinum Membership) (all pages)

Technical Documents

☐ (b) Statement of the prospective bidder of all its ongoing government and private contracts, including contracts awarded but not yet started, if any, whether similar or not similar in nature and complexity to the contract to be bid; **and**

☐ (c) Statement of the bidder's Single Largest Completed Contract (SLCC) similar to the contract to be bid, except under conditions provided under the rules; **and**

☐ (d) Special PCAB License in case of Joint Ventures;
and registration for the type and cost of the contract to be bid; **and**

☐ (e) Original copy of Bid Security. If in the form of a Surety Bond, submit also a certification issued by the Insurance Commission;
or
Original copy of Notarized Bid Securing Declaration; **and**

(f) Project Requirements, which shall include the following:

☐ a. Organizational chart for the contract to be bid;

☐ b. List of contractor's key personnel (*e.g.*, Project Manager, Project Engineers, Materials Engineers, and Foremen), to be assigned to the contract to be bid, with their complete qualification and experience data;

☐ c. List of contractor's major equipment units, which are owned, leased, and/or under purchase agreements, supported by proof of ownership or certification of availability of equipment from the equipment lessor/vendor for the duration of the project, as the case may be; **and**

☐ (g) Original duly signed Omnibus Sworn Statement (OSS);
and if applicable, Original Notarized Secretary's Certificate in case of a corporation, partnership, or cooperative; or Original Special Power of Attorney of all members of the joint venture giving full power and authority to its officer to sign the OSS and do acts to represent the Bidder.

Financial Documents

☐ (h) The prospective bidder's computation of Net Financial Contracting Capacity (NFCC).

Class "B" Documents

☐ (i) If applicable, duly signed joint venture agreement (JVA) in accordance with RA No. 4566 and its IRR in case the joint venture is already in existence;
or
duly notarized statements from all the potential joint venture partners stating that they will enter into and abide by the provisions of the JVA in the instance that the bid is successful.

II. FINANCIAL COMPONENT ENVELOPE

☐ (j) Original of duly signed and accomplished Financial Bid Form; **and**

Other documentary requirements under RA No. 9184

☐ (k) Original of duly signed Bid Prices in the Bill of Quantities; **and**

☐ (l) Duly accomplished Detailed Estimates Form, including a summary sheet indicating the unit prices of construction materials, labor rates, and equipment rentals used in coming up with the Bid; **and**

☐ (m) Cash Flow by Quarter.

SECTION X

BIDDING FORM

Bid Form for the Procurement of Infrastructure Projects

[shall be submitted with the Bid]

BID FORM

Date : _____
Project Identification No. : _____

To: **Philippine Ports Authority**
PPA Building, Bonifacio Drive,
South Harbor, Port Area, Manila

Having examined the Philippine Bidding Documents (PBDs) including the Supplemental or Bid Bulletin Numbers _____, the receipt of which is hereby duly acknowledged, we, the undersigned, declare that:

a. We have no reservation to the PBDs, including the Supplemental or Bid Bulletins, for the Procurement Project: **Construction of Two-Storey TMO Building, Port of Bauan, Batangas**;

b. We offer to execute the Works for this Contract in accordance with the PBDs;

c. The total price of our Bid in words and figures, excluding any discounts offered below is: _____;

d. The discounts offered and the methodology for their application are: _____;

e. The total bid price includes the cost of all taxes, such as, but not limited to: *[specify the applicable taxes, e.g. (i) value added tax (VAT), (ii) income tax, (iii) local taxes, and (iv) other fiscal levies and duties]*, which are itemized herein and reflected in the detailed estimates,

f. Our Bid shall be valid within the period stated in the PBDs, and it shall remain binding upon us at any time before the expiration of that period;

g. If our Bid is accepted, we commit to obtain a Performance Security in the amount of _____ percent of the Contract Price for the due performance of the Contract, or a Performance Securing Declaration in lieu of the the allowable forms of Performance Security, subject to the terms and conditions of issued GPPB guidelines[1] for this purpose;

h. We are not participating, as Bidders, in more than one Bid in this bidding process, other than alternative offers in accordance with the Bidding Documents;

i. We understand that this Bid, together with your written acceptance thereof

---

[1] currently based on GPPB Resolution No. 09-2020

included in your notification of award, shall constitute a binding contract between us, until a formal Contract is prepared and executed; and

j. We understand that you are not bound to accept the Lowest Calculated Bid or any other Bid that you may receive.

k. We likewise certify/confirm that the undersigned, is the duly authorized representative of the bidder, and granted full power and authority to do, execute and perform any and all acts necessary to participate, submit the bid, and to sign and execute the ensuing contract for the **Construction of Two-Storey TMO Building, Port of Bauan, Batangas** of the **Philippine Ports Authority**.

l. We acknowledge that failure to sign each and every page of this Bid Form, including the Bill of Quantities, shall be a ground for the rejection of our bid.

Name: _____

Legal Capacity: _____

Signature: _____

Duly authorized to sign the Bid for and behalf of: _____

Date: _____

STATEMENT OF THE BIDDER'S ALL ONGOING GOVERNMENT AND PRIVATE CONTRACTS, INCLUDING CONTRACTS AWARDED BUT NOT YET STARTED

I hereby declare that all ongoing contracts, including awarded contracts yet to be started coinciding with the contract to be bid are listed below:

Name of outstanding Contracts 1]	Owner's Name and Address	Scope of Work 2]	Contractor's Role and Percentage of Participation 3]	Total Contract Amount or Value 4]	Date of Contract and NOA 5]	Value of Outstanding Works 6]	Accomplishment (in percentage, %) 7]		Contract Duration 8]	
							Planned	Actual	Start of Project	Estimated Completion Date
A) Government Contracts i. On-going ii. Awarded but not yet started B) Private Contracts i. On-going ii. Awarded but not yet started										

NOTE:
1] As appearing in the contract executed by the parties.
2] With special reference to the Scope of Works of the Project as described/enumerated in the Contract.
3] Indicate the percentage of participation and whether as Sole Contractor, Sub-Contractor or Member in a Joint Venture / Consortium.
4] Indicate the FOREX used if Contract Value is expressed in a currency other than the Philippine Peso.
5] As appearing in the Contract and Notice of Award (NOA).
6] Amount or value of all outstanding or uncompleted portions of the projects under ongoing contracts, including awarded contracts yet to be started coinciding with the contract to be bid.
7] Percentage of Accomplishment as of the preceding month which should not be earlier than two (2) months from the date of bid submission.
8] As appearing in the Notice to Proceed and Contract.

This Statement shall be supported by:
a) Notice of Award
b) Notice to Proceed and Contract

Name of Firm

Name of Bidder/Authorized Representative
(Signatory's Legal Capacity)

Date

Revised: September 2021

STATEMENT OF THE BIDDER'S SINGLE LARGEST COMPLETED CONTRACT (SLCC) SIMILAR TO THE CONTRACT TO BE BID

Name of the completed Contract 1]	Owner's Name and Address	Scope of Work 2]	Contractor's Role and Percentage of Participation 3]	Total Contract Value At 4]			Date of Award 5]	Contract Duration 6]	
				Award	Completion	Escalated Value to Present Prices		Start	Completed

NOTE :

1] As appearing in the contract executed by the parties.
2] With special reference to the Scope of Works of the Project as described/enumerated in the Contract.
3] Indicate the percentage of participation and whether as Sole Contractor, Sub-Contractor or Member in a Joint Venture / Consortium.
4] Indicate the FOREX used if Contract Value is expressed in a currency other than the Philippine Peso. Attached the computation for the escalated contract value.
5] As appearing in the Notice of Award.
6] As appearing in the Notice to proceed and Certificate of Completion.

A. The bidder must have an experience of having completed a SLCC that is similar to the contract to be bid equivalent to at least fifty percent (50%) of the ABC, adjusted if necessary, by the Bidder to current prices using the PSA consumer price indices. A contract is considered to be "similar" to the contract to be bid if it has the same Major Categories of Work as stated in the Bid Data Sheet (BDS).
B. This Statement shall be supported by:
   a. Notice of Award, Notice to Proceed and Contract.
   b. Project Owner's Certificate of Final Acceptance issued by the owner and/ or Constructors Performance Evaluation System (CPES) Final Rating, which must be at least Satisfactory. The said Certificate of Acceptance shall contain the following: 1) Name of project owner that issued the certificate, 2) Name of Contractor/ Constructor, 3) Name of Contract, and 4) Contract Duration.
   c. Recapitulation or Final Bill of Quantities.

Name of Firm	Name of Bidder/Authorized Representative (Signatory's Legal Capacity)	Date

Revised: September 2021

STATEMENT OF THE BIDDER'S EXPERIENCE ON MAJOR CATEGORIES OF WORK OF THE SLCC INCLUDING OTHER COMPLETED CONTRACTS SIMILAR TO THE CONTRACT TO BE BID

Major Categories of Work 1]	Unit of Measure 1]	Quantity 1]	SLCC similar to the contract to be bid 2]	Other completed contracts similar to the contract to be bid 2]			Unit of Measure 2]	Quantity 2]
			Name of the contract	Name of the contract	Name of the contract	Name of the contract		
1. Pile Driving Works	l.m.	176						
2. Reinforced Concrete Works	cu.m.	111						
3. Construction of office building	sq.m.	234						

NOTE:
1] As stated in the Bid Data Sheet.
2] As appearing in the Recapitulation and/ or Final Bill of Quantities.
This statement shall be supported by:
a. Notice of Award, Notice to Proceed and Contract.
b. Project Owner's Certificate of Final Acceptance issued by the owner and/ or Constructors Performance Evaluation System (CPES) Final Rating, of at least satisfactory. The said Certificate of Acceptance shall contain the following: 1) Name of project owner that issued the certificate, 2) Name of Contractor/Constructor, 3) Name of Contract, and 4) Contract Duration.
c. Recapitulation and/ or Final Bill of Quantities.

Name of Firm

Name of Bidder/Authorized Representative
Signatory's Legal Capacity

Date

Revised: September 2021

FINANCIAL DATA

A. The prospective bidder's audited Financial Statements, showing, among others, the prospective bidder's total and current assets and liabilities, stamped "RECEIVED" by the Bureau of Internal Revenue (BIR), or its duly accredited and authorized institutions, for the preceding calendar year which should not be earlier than two (2) years from the date of bid submission.

	Year
1. Total Assets	
2. Current Assets	
3. Total Liabilities	
4. Current Liabilities	
5. Net worth (1-3)	
6. Net Working Capital (2-4)	

B. The computation of the bidders Net Financial Contracting Capacity (NFCC) must be at least equal to the ABC to be bid, as follows:

NFCC = [(Current assets minus current liabilities) (15)] minus the value of all outstanding or uncompleted portions of the projects under ongoing contracts, including awarded contracts yet to be started coinciding with the contract to be bid.

NFCC = _____

Attached herewith are certified true copies of the audited financial statements stamped received by the BIR or BIR authorized collecting agent for the latest/immediately preceding calendar year.

_____
Name of Firm/Applicant

_____
Authorized Signing Official

Date:_____

NOTES:

If Partnership or Joint Venture, each Partner or Member Firm of Joint venture shall submit separate financial statements.

STATEMENT OF THE BIDDER'S KEY PERSONNEL PLEDGED FOR THE CONTRACT TO BE BID

I hereby declare that the following key personnel are qualified and available for the duration of the contract to be bid:

Position of Key Personnel 1]	Name	No. of Key Personnel	Similar Experience in the Position (Years) 2]	Total Experience in the Position (Years)	Attachment(s)	Annex(es)
Project Manager					PRC License (CE Preferred) Complete Qualification and Experience Data Certificate of Commitment	Annex "_"
Project Engineer					PRC License (CE Preferred) Complete Qualification and Experience Data Certificate of Commitment	Annex "_"
Project Architect					PRC License Complete Qualification and Experience Data Certificate of Commitment	Annex "_"
Materials Engineer I					PRC License (CE Preferred) Submit Valid and Renewed DPWH Certificate of Accreditation Submit Accreditation Identification Card as Materials Engineer Complete Qualification and Experience Data Certificate of Commitment	Annex "_"
Construction Safety and Health Officer					Certificate of Safety and Health Construction Related Course issued by DOLE Accredited Trainings Complete Qualification and Experience Data Certificate of Commitment	Annex "_"
Foreman					Complete Qualification and Experience Data Certificate of Commitment	Annex "_"
Other Position(s)					Complete Qualification and Experience Data Certificate of Commitment	Annex "_"

NOTE: 1] As stated in the Bid Data Sheet
2] The number of years of experience of the key personnel shall be as indicated in the qualification and experience data or curriculum vitae.

Minimum qualification requirements: The key personnel must have a work experience that is similar in nature and complexity to the contract to be bid.

Project Manager - Five (5) years
Project Engineer - Three (3) years
Project Architect - Three (3) years
Foreman - Five (5) years

Materials Engineer – One (1) year
Materials Engineer I – for projects costing up to 100M
Materials Engineer II – for projects costing more than 100M
Construction Safety and Health Officer – One (1) year

Name of Firm

Name of Bidder/Authorized Representative
(Signatory's Legal Capacity)

Date

Revised: September 2021

STATEMENT OF THE BIDDER'S EQUIPMENT PLEDGED FOR THE CONTRACT TO BE BID

I hereby declare that the following equipment are in good operating condition and available for the duration of the contract to be bid:

DESCRIPTION (Type, Model, Make)	No. of Unit(s)	Capacity/ Output 1]	Owned, Leased, and/or under purchased agreement 2]	Proof of Ownership/ Leased/ Under Purchase Agreement (Mark as Annex "A.....Z") 3]	OTHER INFORMATION (As Applicable)				
					Manufacturer	Engine Serial No.	Chassis No./ Name of Vessel	Location	Status

NOTE:

1] The unit of capacity of the pledged equipment shall be as indicated in the Proof of Ownership, i.e. GW (for crane barge), DWT (for deck barge and hopper barge), Ton (for crane, road roller and drop hammer), kg.-m/blow (for diesel hammer), cu.m. (for dump truck), hp (for tugboat, road grader, bulldozer and concrete vibrator), cfm (for compressor), gal (for water truck with pump), amp (for welding machine), bagger (for concrete mixer). If the capacity of the pledged equipment is not indicated in the Proof of Ownership/Leased Contract/Purchased Agreement, submit other proof of capacity such as specifications, brochures or other verifiable printouts indicating the model name, model number and other details of the equipment.

2] Indicate if the pledged equipment are owned, leased or under purchase agreement.

3] If the pledged equipment is owned, it should be in the name of the bidder. Submit proof of ownership, i.e. deed of sale, sales invoice, official receipt; For owned Water Truck, Dump Truck and Transit Mixer submit LTO Certificate of Registration and valid Official Receipt; For owned barge/tugboat, submit Marina Certificate of Ownership and valid Cargo Ship Safety Certificate.

If the pledged equipment is leased/under purchased agreement, submit certification of availability of equipment from the equipment lessor/vendor for the duration of the project, and duly Notarized copy of leased contract/purchased agreement.

If the pledged barge/tugboat is leased/under purchase agreement, submit certification of availability of barge/tugboat from the equipment lessor/vendor for the duration of the project, and duly Notarized copy of leased contract/purchased agreement together with a copy of the Marina Certificate of Ownership and valid Cargo Ship Safety Certificate.

The Minimum Major Equipment Requirements are listed in Section 8, Annex 3.

Name of Firm	Name of Bidder/Authorized Representative (Signatory's Legal Capacity)	Date

Revised: September 2021

Omnibus Sworn Statement for Sole Proprietorship

[shall be submitted with the Bid]

REPUBLIC OF THE PHILIPPINES)
CITY/MUNICIPALITY OF _____) S.S.

AFFIDAVIT

I, _____, of legal age, [Civil Status], [Nationality], and residing at _____, after having been duly sworn in accordance with law, do hereby depose and state that:

1. I am the sole proprietor or authorized representative of _____ with office address at _____;

2. As the owner and sole proprietor, or authorized representative of _____, I have full power and authority to do, execute and perform any and all acts necessary to participate, submit the bid, and to sign and execute the ensuing contract for **Construction of Two-Storey TMO Building, Port of Bauan, Batangas** of the **Philippine Ports Authority**, as shown in the attached duly notarized Special Power of Attorney;

3. [Name of Bidder] is not "blacklisted" or barred from bidding by the Government of the Philippines or any of its agencies, offices, corporations, or Local Government Units, foreign government/foreign or international financing institution whose blacklisting rules have been recognized by the Government Procurement Policy Board, **by itself or by relation, membership, association, affiliation, or controlling interest with another blacklisted person or entity as defined and provided for in the Uniform Guidelines on Blacklisting;**

4. Each of the documents submitted in satisfaction of the bidding requirements is an authentic copy of the original, complete, and all statements and information provided therein are true and correct;

5. [Name of Bidder] is authorizing the Head of the Procuring Entity or its duly authorized representative(s) to verify all the documents submitted;

6. The owner or sole proprietor is not related to the Head of the Procuring Entity, members of the Bids and Awards Committee (BAC), the Technical Working Group, and the BAC Secretariat, the head of the Project Management Office or the end-user unit, and the project consultants by consanguinity or affinity up to the third civil degree;

7. *[Name of Bidder]* complies with existing labor laws and standards; and

8. *[Name of Bidder]* is aware of and has undertaken the responsibilities as a Bidder in compliance with the Philippine Bidding Documents, which includes:

   a. Carefully examining all of the Bidding Documents;
   b. Acknowledging all conditions, local or otherwise, affecting the implementation of the Contract;
   c. Making an estimate of the facilities available and needed for the contract to be bid, if any; and
   d. Inquiring or securing Supplemental/Bid Bulletin(s) issued for the *[Name of the Project]*.

9. *[Name of Bidder]* did not give or pay directly or indirectly, any commission, amount, fee, or any form of consideration, pecuniary or otherwise, to any person or official, personnel or representative of the government in relation to any procurement project or activity.

10. **In case advance payment was made or given, failure to perform or deliver any of the obligations and undertakings in the contract shall be sufficient grounds to constitute criminal liability for Swindling (Estafa) or the commission of fraud with unfaithfulness or abuse of confidence through misappropriating or converting any payment received by a person or entity under an obligation involving the duty to deliver certain goods or services, to the prejudice of the public and the government of the Philippines pursuant to Article 315 of Act No. 3815 s. 1930, as amended, or the Revised Penal Code.**

IN WITNESS WHEREOF, I have hereunto set my hand this __ day of ___, 20__ at _____, Philippines.

_____
Name of Bidder/ Authorized Representative
(Signatory's Legal Capacity)
AFFIANT

[Jurat]
[Format shall be based on the latest Rules on Notarial Practice]

Omnibus Sworn Statement for Partnership or Cooperative

[shall be submitted with the Bid]

REPUBLIC OF THE PHILIPPINES)
CITY/MUNICIPALITY OF _____) S.S.

AFFIDAVIT

I, _____, of legal age, [Civil Status], [Nationality], and residing at _____, after having been duly sworn in accordance with law, do hereby depose and state that:

1. I am the duly authorized and designated representative of _____ with office address at _____;

2. I am granted full power and authority to do, execute and perform any and all acts necessary to participate, submit the bid, and to sign and execute the ensuing contract for **Construction of Two-Storey TMO Building, Port of Bauan, Batangas** of the **Philippine Ports Authority**, as shown in the attached [state title of attached document showing proof of authorization (e.g., duly notarized Secretary's Certificate, Board/Partnership Resolution, or Special Power of Attorney, whichever is applicable;)];

3. [Name of Bidder] is not "blacklisted" or barred from bidding by the Government of the Philippines or any of its agencies, offices, corporations, or Local Government Units, foreign government/foreign or international financing institution whose blacklisting rules have been recognized by the Government Procurement Policy Board, **by itself or by relation, membership, association, affiliation, or controlling interest with another blacklisted person or entity as defined and provided for in the Uniform Guidelines on Blacklisting;**

4. Each of the documents submitted in satisfaction of the bidding requirements is an authentic copy of the original, complete, and all statements and information provided therein are true and correct;

5. [Name of Bidder] is authorizing the Head of the Procuring Entity or its duly authorized representative(s) to verify all the documents submitted;

6. None of the officers and members of *[Name of Bidder]* is related to the Head of the Procuring Entity, members of the Bids and Awards Committee (BAC), the Technical Working Group, and the BAC Secretariat, the head of the Project Management Office or the end-user unit, and the project consultants by consanguinity or affinity up to the third civil degree;

7. *[Name of Bidder]* complies with existing labor laws and standards; and

8. *[Name of Bidder]* is aware of and has undertaken the responsibilities as a Bidder in compliance with the Philippine Bidding Documents, which includes:

   a. Carefully examining all of the Bidding Documents;
   b. Acknowledging all conditions, local or otherwise, affecting the implementation of the Contract;
   c. Making an estimate of the facilities available and needed for the contract to be bid, if any; and
   d. Inquiring or securing Supplemental/Bid Bulletin(s) issued for the *[Name of the Project]*.

9. *[Name of Bidder]* did not give or pay directly or indirectly, any commission, amount, fee, or any form of consideration, pecuniary or otherwise, to any person or official, personnel or representative of the government in relation to any procurement project or activity.

10. **In case advance payment was made or given, failure to perform or deliver any of the obligations and undertakings in the contract shall be sufficient grounds to constitute criminal liability for Swindling (Estafa) or the commission of fraud with unfaithfulness or abuse of confidence through misappropriating or converting any payment received by a person or entity under an obligation involving the duty to deliver certain goods or services, to the prejudice of the public and the government of the Philippines pursuant to Article 315 of Act No. 3815 s. 1930, as amended, or the Revised Penal Code.**

IN WITNESS WHEREOF, I have hereunto set my hand this __ day of ___, 20__ at _____, Philippines.

_____
Name of Bidder/ Authorized Representative
(Signatory's Legal Capacity)
AFFIANT

[Jurat]
[Format shall be based on the latest Rules on Notarial Practice]

Omnibus Sworn Statement for Corporation or Joint Venture

[shall be submitted with the Bid]

REPUBLIC OF THE PHILIPPINES)
CITY/MUNICIPALITY OF _____) S.S.

AFFIDAVIT

I, _____, of legal age, [Civil Status], [Nationality], and residing at _____, after having been duly sworn in accordance with law, do hereby depose and state that:

1. I am the duly authorized and designated representative of _____ with office address at _____;

2. I am granted full power and authority to do, execute and perform any and all acts necessary to participate, submit the bid, and to sign and execute the ensuing contract for **Construction of Two-Storey TMO Building, Port of Bauan, Batangas**, as shown in the attached [state title of attached document showing proof of authorization (e.g., duly notarized Secretary's Certificate, Board/Partnership Resolution, or Special Power of Attorney, whichever is applicable;)];

3. [Name of Bidder] is not "blacklisted" or barred from bidding by the Government of the Philippines or any of its agencies, offices, corporations, or Local Government Units, foreign government/foreign or international financing institution whose blacklisting rules have been recognized by the Government Procurement Policy Board, **by itself or by relation, membership, association, affiliation, or controlling interest with another blacklisted person or entity as defined and provided for in the Uniform Guidelines on Blacklisting;**

4. Each of the documents submitted in satisfaction of the bidding requirements is an authentic copy of the original, complete, and all statements and information provided therein are true and correct;

5. [Name of Bidder] is authorizing the Head of the Procuring Entity or its duly authorized representative(s) to verify all the documents submitted;

6. None of the officers, directors, and controlling stockholders of *[Name of Bidder]* is related to the Head of the Procuring Entity, members of the Bids and Awards Committee (BAC), the Technical Working Group, and the BAC Secretariat, the head of the Project Management Office or the end-user unit, and the project consultants by consanguinity or affinity up to the third civil degree;

7. *[Name of Bidder]* complies with existing labor laws and standards; and

8. *[Name of Bidder]* is aware of and has undertaken the responsibilities as a Bidder in compliance with the Philippine Bidding Documents, which includes:

   a. Carefully examining all of the Bidding Documents;
   b. Acknowledging all conditions, local or otherwise, affecting the implementation of the Contract;
   c. Making an estimate of the facilities available and needed for the contract to be bid, if any; and
   d. Inquiring or securing Supplemental/Bid Bulletin(s) issued for the *[Name of the Project]*.

9. *[Name of Bidder]* did not give or pay directly or indirectly, any commission, amount, fee, or any form of consideration, pecuniary or otherwise, to any person or official, personnel or

representative of the government in relation to any procurement project or activity.

10. **In case advance payment was made or given, failure to perform or deliver any of the obligations and undertakings in the contract shall be sufficient grounds to constitute criminal liability for Swindling (Estafa) or the commission of fraud with unfaithfulness or abuse of confidence through misappropriating or converting any payment received by a person or entity under an obligation involving the duty to deliver certain goods or services, to the prejudice of the public and the government of the Philippines pursuant to Article 315 of Act No. 3815 s. 1930, as amended, or the Revised Penal Code.**

IN WITNESS WHEREOF, I have hereunto set my hand this __ day of ___, 20__ at _____, Philippines.

_____
Name of Bidder/ Authorized Representative
(Signatory's Legal Capacity)
AFFIANT

[Jurat]
[Format shall be based on the latest Rules on Notarial Practice]

Bid Securing Declaration Form

[shall be submitted with the Bid if bidder opts to provide this form of bid security]

REPUBLIC OF THE PHILIPPINES)
CITY OF _____) S.S.

BID SECURING DECLARATION
Project Identification No.: _____

To: **Philippine Ports Authority**
PPA Building, Bonifacio Drive,
South Harbor, Port Area, Manila

I/We, the undersigned, declare that:

1. I/We understand that, according to your conditions, bids must be supported by a Bid Security, which may be in the form of a Bid Securing Declaration.

2. I/We accept that: (a) I/we will be automatically disqualified from bidding for any procurement contract with any procuring entity for a period of two (2) years upon receipt of your Blacklisting Order; and, (b) I/we will pay the applicable fine provided under Section 6 of the Guidelines on the Use of Bid Securing Declaration, within fifteen (15) days from receipt of the written demand by the procuring entity for the commission of acts resulting to the enforcement of the bid securing declaration under Sections 23.1(b), 34.2, 40.1 and 69.1, except 69.1(f),of the IRR of RA No. 9184; without prejudice to other legal action the government may undertake.

3. I/We understand that this Bid Securing Declaration shall cease to be valid on the following circumstances:

   a. Upon expiration of the bid validity period, or any extension thereof pursuant to your request;
   b. I am/we are declared ineligible or post-disqualified upon receipt of your notice to such effect, and (i) I/we failed to timely file a request for reconsideration or (ii) I/we filed a waiver to avail of said right; and
   c. I am/we are declared the bidder with the Lowest Calculated Responsive Bid, and I/we have furnished the performance security and signed the Contract.

IN WITNESS WHEREOF, I/We have hereunto set my/our hand/s this ____ day of *[month] [year]* at *[place of execution]*.

_____
Name of Bidder/ Authorized Representative
(Signatory's Legal Capacity)
AFFIANT

[Jurat]
[Format shall be based on the latest Rules on Notarial Practice]

CONSTRUCTION METHODOLOGY

Name of Project : _____

Project Description : _____

Location : _____

MINIMUM SCOPE OF CONSTRUCTION METHODOLOGY

A. CONSTRUCTION OF TMO BUILDING

1. Supply, driving & chipping of 400 x 400mm PSC foundation piles
2. Construction of 2-storey TMO Building, complete with architectural finishes, electro/mechanical, water/sewerage system, painting, etc. (467.87 sq.m.)
3. Supply, delivery & installation of distribution Transformer & accessories
4. Supply & installation of solar panel & accessories

NOTES:

The narrative construction method will guide and familiarize the contractor and the PPA on how the project shall be carried out in accordance with the highest standard of workmanship.

The construction method shall be consistent with the Bar Chart / S-Curve Schedule, Equipment Schedule and Manpower Schedule.

_____
Name of Bidder/Authorized Representative
(Signatory's Legal Capacity)

MANPOWER SCHEDULE

Name of Project : _____

Project Description : _____

Location : _____

MANPOWER (Minimum)	CONTRACT DURATION (_____ Calendar Days)									
	MONTHLY									
	1	2	3	4	5	6	7	8	9	10
Project Manager										
Project Engineer										
Project Architect										
Materials Engineer I										
Construction Safety and Health Officer										
Foreman										
Specify other applicable positions, ie.:										
- Carpenter										
- Steelman										
- Mason										
- Electrician										
- Rigger										
- Others										

_____
Name of Bidder/Authorized Representative
(Signatory's Legal Capacity)

Revised: September 2021

EQUIPMENT UTILIZATION SCHEDULE

Name of Project : _____

Project Description : _____

Location : _____

EQUIPMENT (Minimum)	No. of Units	CONTRACT DURATION (_____ Calendar Days)									
		M O N T H L Y									
		1	2	3	4	5	6	7	8	9	10

_____
Name of Bidder/Authorized Representative
(Signatory's Legal Capacity)

Revised: September 2021

CASHFLOW BY QUARTER AND PAYMENT SCHEDULE

Name of Project: : _____

Project Description : _____

Location : _____

Project Duration (days or months)	Payment Schedule (Monthly, in Pesos)	Cash flow (Quarterly, in Pesos)
TOTAL		

NOTES

- The cash flow by quarter and payment schedule should be consistent with the Bar Chart and S-curb.
- Payment schedule shall not be more than once a month.

_____
Name of Bidder/Authorized Representative
(Signatory's Legal Capacity)

Revised: September 2021

Contract Agreement Form for the Procurement of Infrastructure Projects (Revised)

[not required to be submitted with the Bid, but it shall be submitted within ten (10) days after receiving the Notice of Award]

CONTRACT AGREEMENT

THIS AGREEMENT, made this _____ day of _____, _____ between **Philippine Ports Authority** with principal office at PPA Building, Bonifacio Drive, South Harbor, Port Area, Manila (hereinafter called the "Entity") and **[name and address of Contractor]** (hereinafter called the "Contractor").

WHEREAS, the Entity is desirous that the Contractor execute **[name and identification number of contract]** (hereinafter called "the Works") and the Entity has accepted the Bid for **[contract price in words and figures in specified currency]** by the Contractor for the execution and completion of such Works and the remedying of any defects therein.

NOW THIS AGREEMENT WITNESSETH AS FOLLOWS:

1. In this Agreement, words and expressions shall have the same meanings as are respectively assigned to them in the Conditions of Contract hereinafter referred to.

2. The following documents as required by the 2016 revised Implementing Rules and Regulations of Republic Act No. 9184 shall be deemed to form and be read and construed as part of this Agreement, *viz.*:

   a. Philippine Bidding Documents (PBDs);
   - i. Drawings/Plans;
   - ii. Specifications;
   - iii. Bill of Quantities;
   - iv. General and Special Conditions of Contract;
   - v. Supplemental or Bid Bulletins, if any;

   b. Winning bidder's bid, including the Eligibility requirements, Technical and Financial Proposals, and all other documents or statements submitted;

   Bid form, including all the documents/statements contained in the Bidder's bidding envelopes, as annexes, and all other documents submitted (*e.g.*, Bidder's response to request for clarifications on the bid), including corrections to the bid, if any, resulting from the Procuring Entity's bid evaluation;

   c. Performance Security;

   d. Notice of Award of Contract and the Bidder's conforme thereto; and

e. Other contract documents that may be required by existing laws and/or the Procuring Entity concerned in the PBDs. **Winning bidder agrees that additional contract documents or information prescribed by the GPPB that are subsequently required for submission after the contract execution, such as the Notice to Proceed, Variation Orders, and Warranty Security, shall likewise form part of the Contract.**

3. In consideration for the sum of **[total contract price in words and figures]** or such other sums as may be ascertained, **[Named of the bidder]** agrees to **[state the object of the contract]** in accordance with his/her/its Bid.

4. The **Philippine Ports Authority** agrees to pay the above-mentioned sum in accordance with the terms of the Bidding.

IN WITNESS whereof the parties thereto have caused this Agreement to be executed the day and year first before written.

JAY DANIEL R. SANTIAGO General Manager	**Name of Bidder/ Authorized Representative** (Signatory's Legal Capacity)
for:	for:
Philippine Ports Authority	**Contractor**

Acknowledgment

[Format shall be based on the latest Rules on Notarial Practice]